SELF-PROPELLED SCISSOR LIFTS

PARTS MANUAL

For JCPT0808HD/JCPT1008HD/JCPT1012HD/JCPT1212HD/JCPT1412HD/JCPT1612HD/JCPT1614HD

For JCPT0808DC/JCPT1008DC/JCPT1012DC/JCPT1212DC/JCPT1412DC/JCPT1612DC/JCPT1614DC

Hydraulic Motor Drive / Electric Motor Drive

WARNING

THE MANUFACTURER SHALL NOT BE HELD LIABLE IN CASE OF FAULTS OR ACCIDENTS DUE TO NEGLIGENCE, INCAPACITY, INSTALLATION BY UNQUALIFIED TECHNICIANS AND IMPROPER USE OF THE MACHINE

DO NOT OPERATE THIS MACHINE UNTIL YOU READ AND UNDERSTAND ALL THE DANGERS,WARNINGS AND CAUTIONS IN THIS MANUAL

Part Number: SM0117217

CE ANSI

Zhejiang Dingli Machinery Co., Ltd.

First Edition, January 2018 Printing

Version of the Record

Version Number	Create Date
SM0117217_Rev1.0	2017-08

Table of Contents

Section 1 Chassis

101.1 Steer Linkage and Wheels Assembly (Hydraulic Motor Drive) 2
102.1 Steer Linkage and Wheels Assembly (Electric Motor Drive) 5
103.1 Pothole Protection Assembly 8
104.1 Battery Pack Module 11
105.1 Power Unit Module (Hydraulic Motor Drive) 14
106.1 Power Unit Module (Electric Motor Drive) 17
107.1 Hydraulic Tank Assembly 20
108.1 Motor Controller Assembly (Electric Motor Drive) 22
109.1 Rear Wheel and Ladder (Hydraulic Motor Drive) 24
110.1 Rear Wheel and Ladder (Electric Motor Drive) 27
111.1 Ground Control and Limit Switch 30
112.1 Counterweight 32

Section 2 Scissor

201.1 Scissor Assembly (JCPT0808HD/DC) 35
202.1 Scissor Assembly (JCPT1008HD/DC) 38
203.1 Scissor Assembly (JCPT1012HD/DC) 41
204.1 Scissor Assembly (JCPT1212HD/DC) 44
205.1 Scissor Assembly (JCPT1412HD/DC, JCPT1612HD/DC, JCPT1614HD/DC) .47

Section 3 Platform

301.1 Main Platform Assembly (JCPT0808HD/DC, JCPT1008HD/DC) 52
302.1 Platform Extension Assembly (JCPT0808HD/DC, JCPT1008HD/DC) 55
303.1 Main Platform Assembly (JCPT1012HD/DC, JCPT1212HD/DC, JCPT1412HD/DC, JCPT1612HD/DC, JCPT1614HD/DC) 58
304.1 Platform Extension Assembly (JCPT1012HD/DC, JCPT1212HD/DC, JCPT1412HD/DC, JCPT1612HD/DC, JCPT1614HD/DC) 61
305.1 Platform Locking Device Assembly 63
306.1 Platform Control Box Assembly 64
307.1 Protective Device Assembly (JCPT0808HD/DC, JCPT1008HD/DC) (Option) .67
308.1 Protective Device Assembly (JCPT1012HD/DC, JCPT1212HD/DC, JCPT1412HD/DC) (Option) 69

Section 4 Hydraulic System

401.1 Lower Lift Cylinder Assembly 72
402.1 Upper Lift Cylinder Assembly (JCPT1212HD/DC, JCPT1412HD/DC, JCPT1612HD/DC, JCPT1614HD/DC) 75

403.1 Function manifold (Hydraulic Motor Drive) 77
404.1 Function manifold (Electric Motor Drive) 79
405.1 Hydraulic Hoses and Fittings (JCPT0808HD, JCPT1008HD, JCPT1012HD) . 81
406.1 Hydraulic Hoses and Fittings (JCPT0808DC, JCPT1008DC, JCPT1012DC) . 84
407.1 Hydraulic Hoses and Fittings (JCPT1212HD, JCPT1412HD) 86
408.1 Hydraulic Hoses and Fittings (JCPT1212DC, JCPT1412DC) 88
409.1 Hydraulic Hoses and Fittings (JCPT1612HD, JCPT1614HD) 90
410.1 Hydraulic Hoses and Fittings (JCPT1612DC, JCPT1614DC) 92

Section 5 Electrical System

501.1 Electrical Harness (JCPT0808HD, JCPT1008HD, JCPT1012HD) 95
502.1 Electrical Harness (JCPT0808DC, JCPT1008DC, JCPT1012DC) 98
503.1 Electrical Harness (JCPT1212HD) 101
504.1 Electrical Harness (JCPT1212DC) 104
505.1 Electrical Harness (JCPT1412HD, JCPT1612HD, JCPT1614HD) 107
506.1 Electrical Harness (JCPT1412DC, JCPT1612DC, JCPT1614DC) 110
507.1 Power to Platform 113

Section 6 Decal

601.1 Decal (CE) 116
602.1 Decal (ANSI) 121

Section 1
Chassis

101.1 Steer Linkage and Wheels Assembly (Hydraulic Motor Drive)

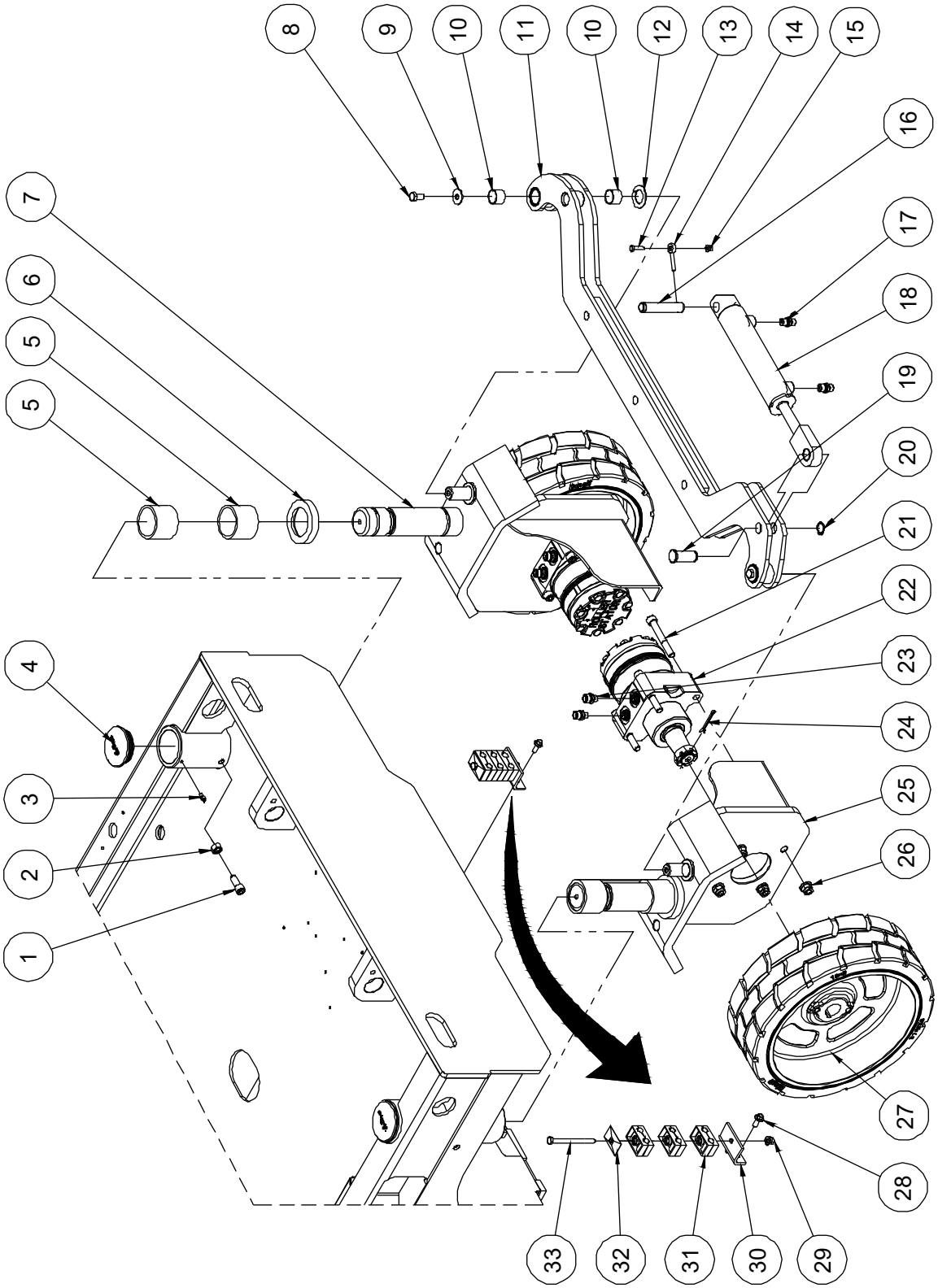

101.1 Steer Linkage and Wheels Assembly (Hydraulic Motor Drive)

Item	Part No.	Description	Qty.
1	10000596	Screw	2
2	00001029	Nut GB/T 6170 M12	2
3	00001030	Screw GB/T 70.1 M5×10	2
4	10000482	Cover	2
5	00000429	8813-556550 Bearing	4
6	10000595	Washer	2
7	10000599	Steer yoke weldment	1
8	00000674	Bolt GB/T 5783 M10×20	2
9	00001028	Washer GB/T 96.1 10	2
10	00000368	8812-252820 Bearing	4
11	10000676	Tie rod weldment (JCPT0808HD, JCPT1008HD)	1
	10000614	Tie rod weldment (JCPT1012HD, JCPT1212HD)	1
	10000953	Tie rod weldment (JCPT1412HD)	1
	10000956	Tie rod weldment (JCPT1612HD)	1
	10000873	Tie rod weldment (JCPT1614HD)	1
12	00000384	8832-26 Bearing	2
13	00000619	Bolt GB/T 5783 M6×25	1
14	00000217	8902-06045 Pin	1
15	00002574	Nut GB/T 6183.1 M6	1
16	00000571	896-20085 Pin	1
17	00001282	Straight fitting	2
18	10000449	Steer cylinder assembly (without seal kit)	1
--	00003057	Seal kit 4020	1
19	00000267	892-20045 Pin	1
20	00000926	Circlips GB/T 894.1-20	1
21	00002182	Screw GB/T 70.1 M12×90	8
22	00002009	Hydraulic motor (JCPT0808HD, JCPT1008HD, JCPT1012HD)	2
	00000533	Hydraulic motor (JCPT1212HD, JCPT1412HD, JCPT1612HD, JCPT1614HD)	2

101.1 Steer Linkage and Wheels Assembly (Hydraulic Motor Drive)

Item	Part No.	Description	Qty.
23	00001771	Straight fitting	4
24	00000634	Cotter pin GB/T 91 4×50	2
25	10000607	Steer yoke weldment	1
26	00002576	Nut GB/T 6183.1 M12	8
27	10000486	Wheel	2
28	00002875	Bolt QC/T 340 M8×20	2
29	00002575	Nut GB/T 6183.1 M8	1
30	10000458	Hose clamp support	1
31	00000538	Hose clamp	3
32	10000047	Base plate	1
33	00001970	Bolt GB/T 5782 M8×100	1

102.1 Steer Linkage and Wheels Assembly (Electric Motor Drive)

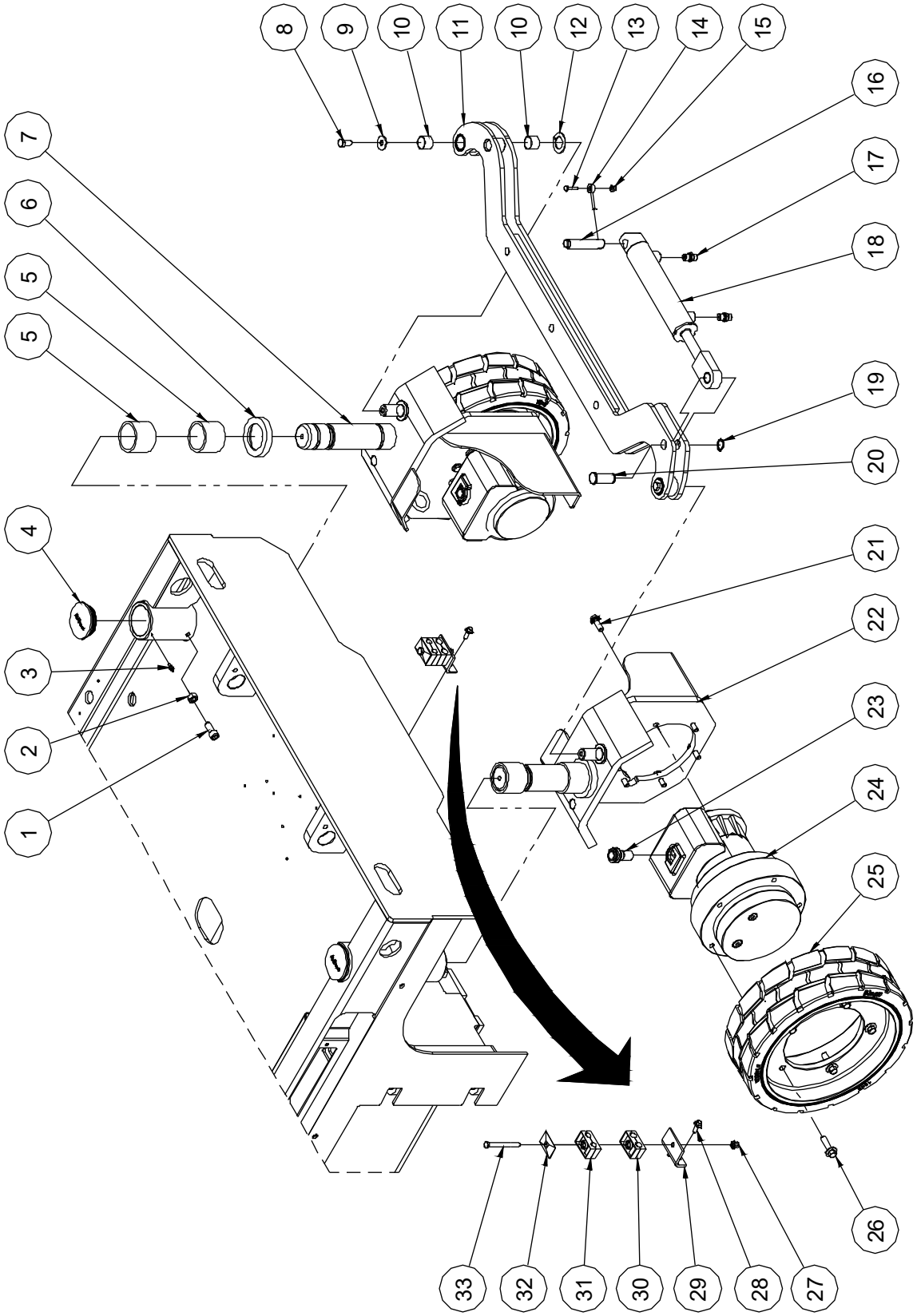

102.1 Steer Linkage and Wheels Assembly (Electric Motor Drive)

Item	Part No.	Description	Qty.
1	10000596	Screw	2
2	00001029	Nut GB/T 6170 M12	2
3	00001030	Screw GB/T 70.1 M5×10	2
4	10000482	Cover	2
5	00000429	8813-556550 Bearing	4
6	10000595	Washer	2
7	10000650	Steer yoke weldment	1
8	00000674	Bolt GB/T 5783 M10×20	2
9	00001028	Washer GB/T 96.1 10	2
10	00000368	8812-252820 Bearing	4
11	10000676	Tie rod weldment (JCPT0808DC, JCPT1008DC)	1
	10000614	Tie rod weldment (JCPT1012DC, JCPT1212DC)	1
	10000953	Tie rod weldment (JCPT1412DC)	1
	10000956	Tie rod weldment (JCPT1612DC)	1
	10000873	Tie rod weldment (JCPT1614DC)	1
12	00000384	8832-26 Bearing	2
13	00000619	Bolt GB/T 5783 M6×25	1
14	00000217	8902-06045 Pin	1
15	00002574	Nut GB/T 6183.1 M6	1
16	00000571	896-20085 Pin	1
17	00001282	Straight fitting	2
18	10000449	Steer cylinder assembly (without seal kit)	1
--	00003057	Seal kit 4020	1
19	00000926	Circlips GB/T 894.1-20	1
20	00000267	892-20045 Pin	1
21	00002879	3/8-16×1 1/8" Bolt ANSI B18.2.1	12
22	10000651	Steer yoke weldment	1
23	10000649	Sheath	2

102.1 Steer Linkage and Wheels Assembly (Electric Motor Drive)

Item	Part No.	Description	Qty.
24	00002021	Drive motor assembly	2
--	00002022	Reducer	1
--	00002018	Motor	1
--	00002023	Brake	1
25	10000641	Wheel	2
26	00002874	Bolt QC/T 340 M12×1.5×40	10
27	00002575	Nut GB/T 6183.1 M8	1
28	00002875	Bolt QC/T 340 M8×20	2
29	10000458	Hose clamp support	1
30	00000539	Hose clamp	1
31	00000538	Hose clamp	1
32	10000047	Base plate	1
33	00001026	Bolt GB/T 5782 M8×80	1

103.1 Pothole Protection Assembly

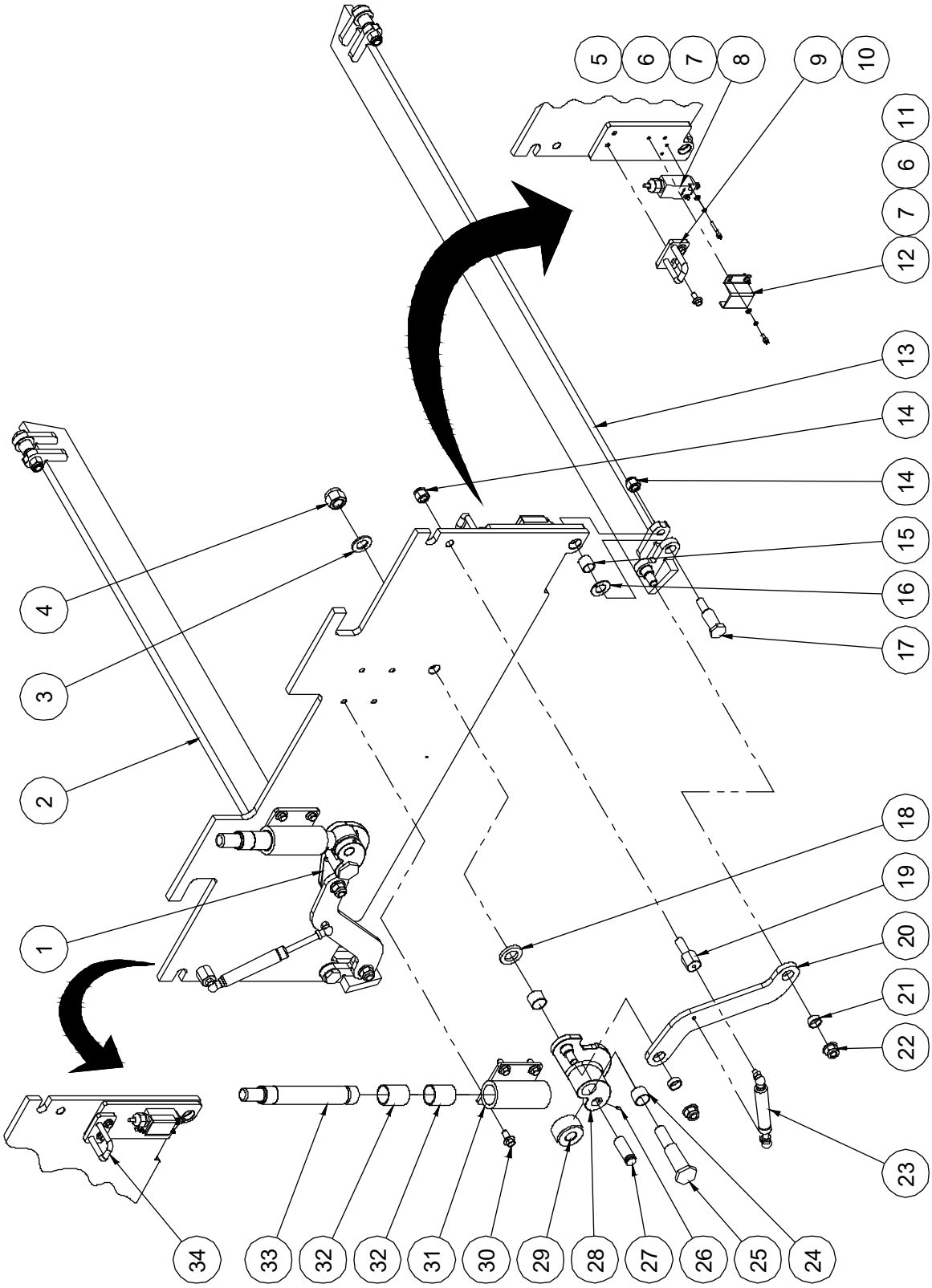

103.1 Pothole Protection Assembly

Item	Part No.	Description	Qty.
1	10000585	Linkage weldment (JCPT0808HD/DC, JCPT1008HD/DC, JCPT1012HD/DC, JCPT1212HD/DC, JCPT1412HD/DC, JCPT1612HD/DC)	1
	10000867	Linkage weldment (JCPT1614HD/DC)	1
2	10000577	Pothole guard weldment (JCPT0808HD/DC, JCPT1008HD/DC, JCPT1012HD/DC, JCPT1212HD/DC, JCPT1412HD/DC)	1
	10000849	Pothole guard weldment (JCPT1612HD/DC, JCPT1614HD/DC)	1
3	00001050	Washer GB/T 97.1 20	2
4	00001051	Nut GB/T 6182 M20	2
5	00001253	Screw GB/T 70.1 M5×30	4
6	00000606	Washer GB/T 93 5	8
7	00000605	Washer GB/T 97.1 5	8
8	00000739	Limit switch	2
9	10000490	Lock clasp	1
10	00002872	Bolt QC/T 340 M8×16	4
11	00001252	Screw GB/T 70.1 M5×12	4
12	10000042	Switch cover	2
13	10000576	Pothole guard weldment (JCPT0808HD/DC, JCPT1008HD/DC, JCPT1012HD/DC, JCPT1212HD/DC, JCPT1412HD/DC)	1
	10000848	Pothole guard weldment (JCPT1612HD/DC, JCPT1614HD/DC)	1
14	00001044	Nut GB/T 6182 M14	6
15	00000359	8812-202320 Bearing	4
16	00000382	8832-20 Bearing	4
17	10000575	Pin	4
18	10000573	Washer	2
19	10000569	Gas shock strut	2
20	10000672	Pothole link plate (JCPT0808HD/DC, JCPT1008HD/DC)	2
	10000570	Pothole link plate (JCPT1012HD/DC, JCPT1212HD/DC)	2
	10000799	Pothole link plate (JCPT1412HD/DC)	2

103.1 Pothole Protection Assembly

Item	Part No.	Description	Qty.
20	10000847	Pothole link plate (JCPT1612HD/DC, JCPT1614HD/DC)	2
21	00000356	8812-202309 Bearing	4
22	00002577	Nut GB/T 6183.1 M14	4
23	10000038	Gas shock	2
24	00000368	8812-252820 Bearing	4
25	10000574	Pin	2
26	00001039	Screw GB/T 78 M5×10	2
27	10000572	Pin	2
28	10000584	Linkage weldment (JCPT0808HD/DC, JCPT1008HD/DC, JCPT1012HD/DC, JCPT1212HD/DC, JCPT1412HD/DC, JCPT1612HD/DC)	1
	10000868	Linkage weldment (JCPT1614HD/DC)	1
29	10000571	Roller	2
30	00002873	Bolt QC/T 340 M10×20	8
31	10000673	Pothole guide (JCPT0808HD/DC, JCPT1008HD/DC)	1
	10000588	Pothole guide (JCPT1012HD/DC, JCPT1212HD/DC, JCPT1412HD/DC, JCPT1612HD/DC, JCPT1614HD/DC)	2
32	00000390	8812-323645 Bearing	4
33	10000633	Pothole hole pusher assembly (JCPT0808HD/DC, JCPT1008HD/DC, JCPT1012HD/DC, JCPT1212HD/DC, JCPT1412HD/DC)	2
	10000958	Pothole hole pusher assembly (JCPT1612HD/DC, JCPT1614HD/DC)	2
34	10000491	Lock clasp	1

104.1 Battery Pack Module

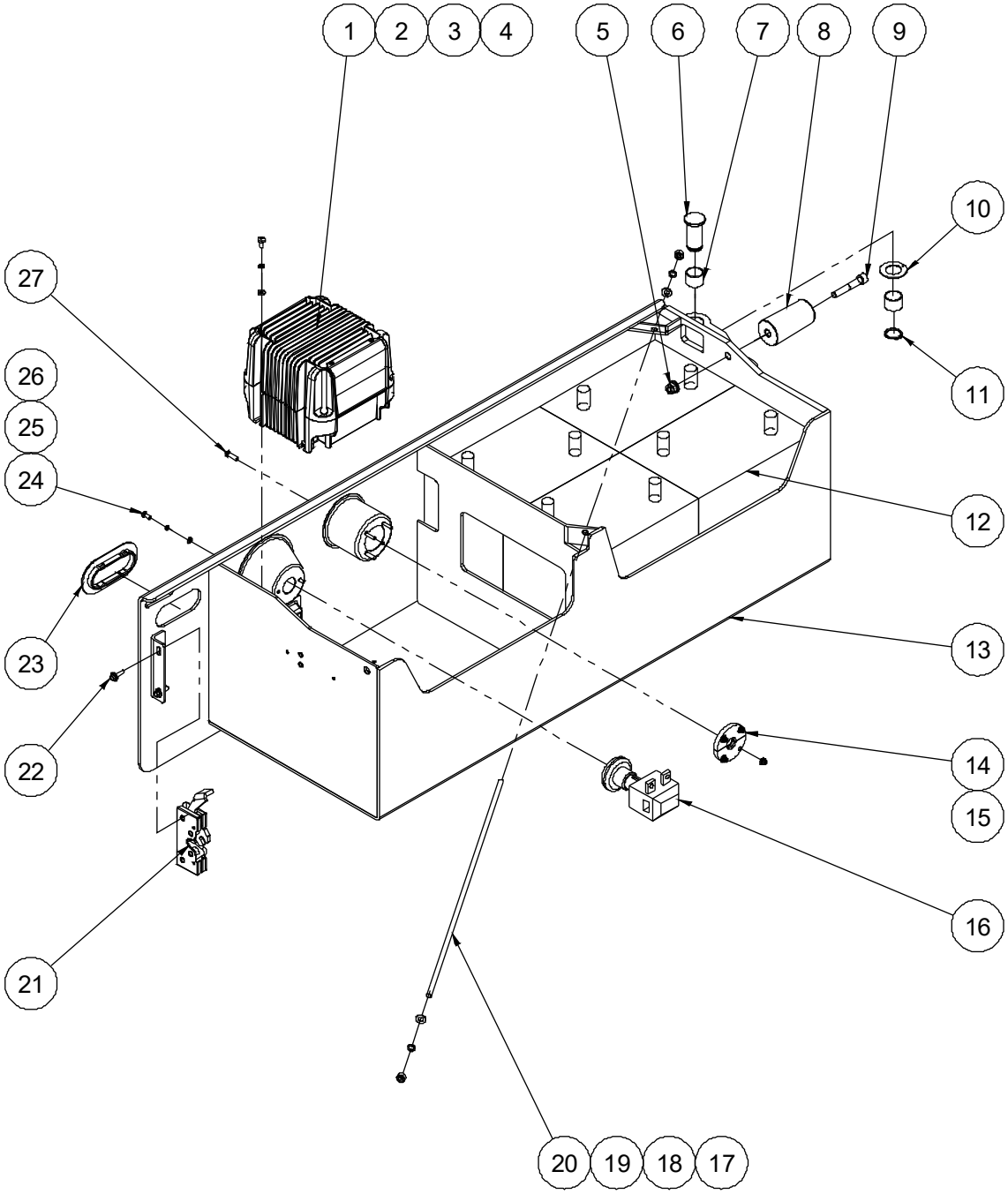

104.1 Battery Pack Module

Item	Part No.	Description	Qty.
1	00000689	Charger (GPSC)	1
	00003123	Charger (HBS)	1
2	00001060	Screw GB/T 818 M6×12 - H	4
3	00000621	Washer GB/T 93 6	4
4	00000620	Washer GB/T 97.1 6	4
5	00002572	Nut GB/T 6183.1 M10	1
6	10000536	Hinge pin	2
7	00000368	8812-252820 Bearing	4
8	10000539	Bumper	1
9	00000614	Screw GB/T 70.1 M10×60	1
10	00000384	8832-26 Bearing	2
11	00000992	Circlips GB/T 894.1-25	2
12	00002011	Battery (JCPT0808HD/DC, JCPT1008HD/DC, JCPT1012HD/DC)	4
	00000690	Battery (JCPT1212HD/DC)	4
	00002014	Battery (JCPT1412HD/DC, JCPT1612HD/DC, JCPT1614HD/DC)	4
13	10000541	Battery tray weldment (JCPT0808HD/DC, JCPT1008HD/DC, JCPT1012HD/DC, JCPT1212HD/DC)	1
	10000794	Battery tray weldment (JCPT1412HD/DC)	1
	10000841	Battery tray weldment (JCPT1612HD/DC, JCPT1614HD/DC)	1
	10001613	Battery tray weldment (Rear fitted changer plug) (JCPT0808HD/DC, JCPT1008HD/DC, JCPT1012HD/DC, JCPT1212HD/DC)	1
	10001622	Battery tray weldment (Rear fitted changer plug) (JCPT1412HD/DC)	1
	10001634	Battery tray weldment (Rear fitted changer plug) (JCPT1612HD/DC, JCPT1614HD/DC)	1
14	10000537	Half-round batten	2
15	00002573	Nut GB/T 6183.1 M5	4
16	00000655	Power switch	1
17	00000610	Nut GB/T 6170 M8	2

104.1 Battery Pack Module

Item	Part No.	Description	Qty.
18	00000609	Washer GB/T 93 8	2
19	00000608	Washer GB/T 97.1 8	2
20	10000538	Threaded rod (JCPT0808HD/DC, JCPT1008HD/DC, JCPT1012HD/DC, JCPT1212HD/DC)	1
	10000793	Threaded rod (JCPT1412HD/DC, JCPT1612HD/DC, JCPT1614HD/DC)	1
21	10000481	Latch (left)	1
22	00002866	Bolt QC/T 340 M6×20	2
23	10000540	Handle hole ring	1
24	00000607	Screw GB/T 818 M5×12 - H	2
25	00000606	Washer GB/T 93 5	2
26	00000605	Washer GB/T 97.1 5	2
27	00000612	Screw GB/T 818 M5×20 - H	4

105.1 Power Unit Module (Hydraulic Motor Drive)

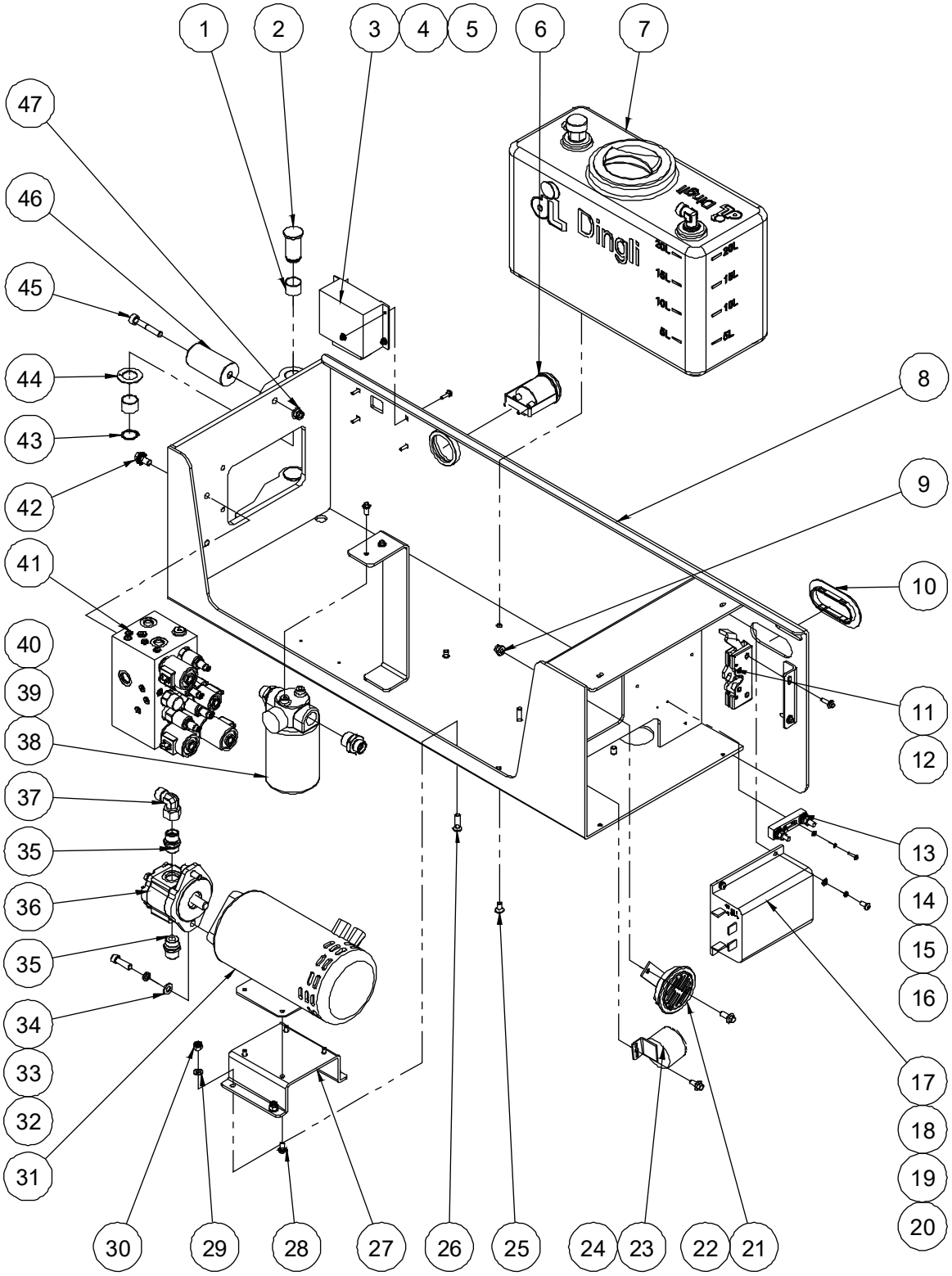

105.1 Power Unit Module (Hydraulic Motor Drive)

Item	Part No.	Description	Qty.
1	00000368	8812-252820 Bearing	4
2	10000536	Hinge pin	2
3	00000692	Controller	1
4	00002573	Nut GB/T 6183.1 M5	4
5	10000560	Screw	4
6	00000698	Hour meter	1
7	10000452	Hydraulic tank assembly (refer to 107.1)	1
8	10000561	Hydraulic tray weldment (JCPT0808HD, JCPT1008HD, JCPT1012HD, JCPT1212HD, JCPT1412HD)	1
	10000844	Hydraulic tray weldment (JCPT1612HD, JCPT1614HD)	1
9	00002575	Nut GB/T 6183.1 M8	1
10	10000540	Handle hole ring	1
11	10000480	Latch (right)	1
12	00002866	Bolt QC/T 340 M6×20	2
13	00001064	250A Fuse assembly	1
--	00001065	250A Fuse	1
--	00000757	Fuse seat	1
14	00001232	Screw GB/T 818 M4×16 - H	2
15	00000779	Washer GB/T 93 4	2
16	00000778	Washer GB/T 97.1 4	2
17	00000693	Motor controller	1
18	00001231	Screw GB/T 818 M6×14 - H	4
19	00000621	Washer GB/T 93 6	4
20	00000620	Washer GB/T 97.1 6	4
21	00000666	Horn	1
22	00002875	Bolt QC/T 340 M8×20	1
23	00001244	Alarm	1
24	00002872	Bolt QC/T 340 M8×16	1
25	00000837	Screw GB/T 70.3 M8×16	4

105.1 Power Unit Module (Hydraulic Motor Drive)

Item	Part No.	Description	Qty.
26	00000839	Screw GB/T 70.3 M8×30	4
27	10000559	Motor bracket	1
28	00002865	Bolt QC/T 340 M6×14	4
29	00000608	Washer GB/T 97.1 8	4
30	00001163	Nut GB/T 6182 M8	4
31	00002017	Motor (JCPT0808HD, JCPT1008HD, JCPT1012HD)	1
	00000691	Motor (JCPT1212HD, JCPT1412HD, JCPT1612HD, JCPT1614HD)	1
32	00001157	3/8-24×1 1/4" Screw ANSI B18.3	2
33	00000679	Washer GB/T 93 10	2
34	00000615	Washer GB/T 97.1 10	2
35	00001776	Straight fitting	2
36	00000529	Pump	1
37	00001835	Elbow	1
38	00000535	Filter assembly	1
--	00003061	Filter element	1
39	00001508	Straight fitting	2
40	00002864	Bolt QC/T 340 M6×16	2
41	00003015	Function manifold (without fitting) (refer to 403.1)	1
42	00002873	Bolt QC/T 340 M10×20	2
43	00000992	Circlips GB/T 894.1-25	2
44	00000384	8832-26 Bearing	2
45	00000614	Screw GB/T 70.1 M10×60	1
46	10000539	Bumper	1
47	00002572	Nut GB/T 6183.1 M10	1

106.1 Power Unit Module (Electric Motor Drive)

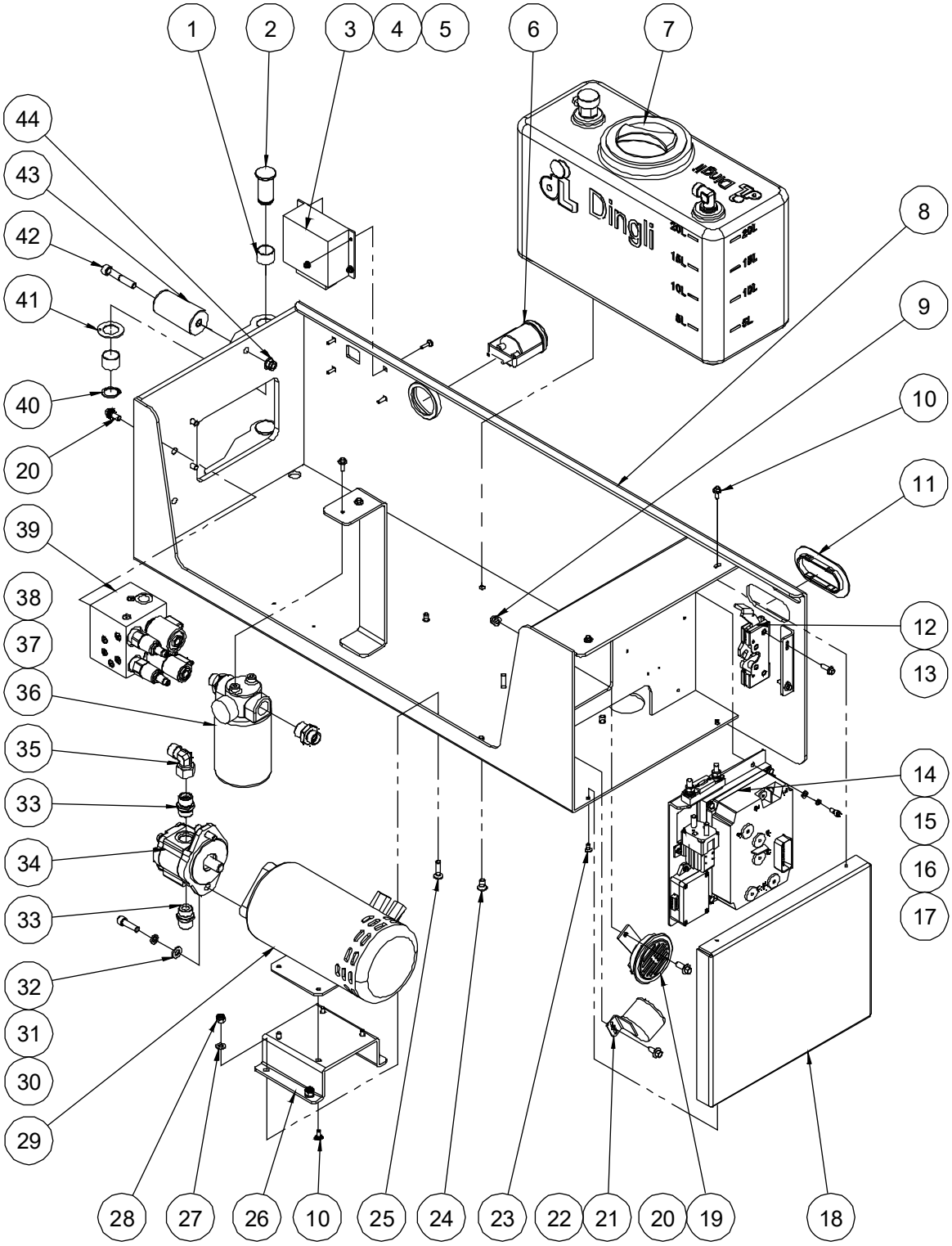

106.1 Power Unit Module (Electric Motor Drive)

Item	Part No.	Description	Qty.
1	00000368	8812-252820 Bearing	4
2	10000536	Hinge pin	2
3	00000692	Controller	1
4	00002573	Nut GB/T 6183.1 M5	4
5	10000560	Screw	4
6	00000698	Hour meter	1
7	10000452	Hydraulic tank assembly (refer to 107.1)	1
8	10000561	Hydraulic tray weldment (JCPT0808DC, JCPT1008DC, JCPT1012DC, JCPT1212DC, JCPT1412DC)	1
	10000844	Hydraulic tray weldment (JCPT1612DC, JCPT1614DC)	1
9	00002575	Nut GB/T 6183.1 M8	1
10	00002865	Bolt QC/T 340 M6×14	6
11	10000540	Handle hole ring	1
12	10000480	Latch (right)	1
13	00002866	Bolt QC/T 340 M6×20	2
14		Motor controller assembly (refer to 108.1)	1
15	00000620	Washer GB/T 97.1 6	4
16	00000621	Washer GB/T 93 6	4
17	00002029	Screw GB/T 70.1 M6×12	4
18	10000048	Cover	1
19	00000666	Horn	1
20	00002875	Bolt QC/T 340 M8×20	5
21	00001244	Alarm	1
22	00002872	Bolt QC/T 340 M8×16	1
23	00000829	Screw GB/T 70.3 M6×12	2
24	00000837	Screw GB/T 70.3 M8×16	4
25	00000839	Screw GB/T 70.3 M8×30	4
26	10000559	Motor bracket	1
27	00000608	Washer GB/T 97.1 8	4

106.1 Power Unit Module (Electric Motor Drive)

Item	Part No.	Description	Qty.
28	00001163	Nut GB/T 6182 M8	4
29	00002017	Motor (JCPT0808DC, JCPT1008DC, JCPT1012DC)	1
	00000691	Motor (JCPT1212DC, JCPT1412DC, JCPT1612DC, JCPT1614DC)	1
30	00001157	3/8-24×1 1/4" Screw ANSI B18.3	2
31	00000679	Washer GB/T 93 10	2
32	00000615	Washer GB/T 97.1 10	2
33	00001776	Straight fitting	2
34	00000529	Pump	1
35	00001835	Elbow	1
36	00000535	Filter assembly	1
--	00003061	Filter element	1
37	00001508	Straight fitting	2
38	00002864	Bolt QC/T 340 M6×16	2
39	00003005	Function manifold (without fitting) (refer to 404.1)	1
40	00000992	Circlips GB/T 894.1-25	2
41	00000384	8832-26 Bearing	2
42	00000614	Screw GB/T 70.1 M10×60	1
43	10000539	Bumper	1
44	00002572	Nut GB/T 6183.1 M10	1

107.1 Hydraulic Tank Assembly

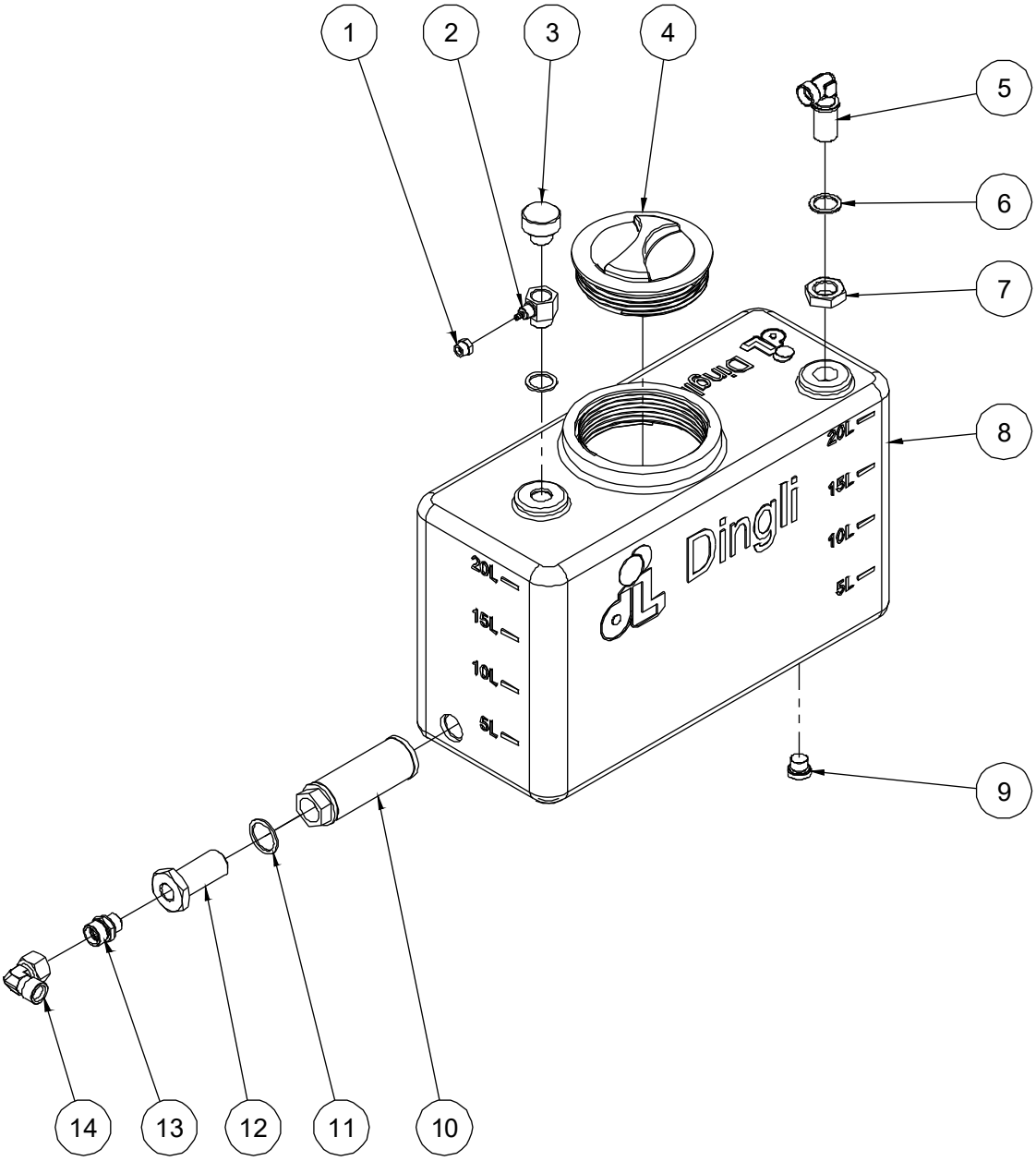

107.1 Hydraulic Tank Assembly

Item	Part No.	Description	Qty.
1	10000462	Nut	1
2	10000463	Fitting	1
3	10000398	Breather	1
4	10000453	Tank cover	1
5	10000466	Fitting	1
6	00001338	Washer JB/T 982 22	2
7	00001998	Nut GB/T 6173 M22×1.5	1
8	10000454	Tank	1
9	00001113	Plug VSTI3/8ED	1
10	00000541	Filter	1
11	10000455	Seal washer 27	1
12	10000456	Fitting	1
13	00001264	Straight fitting	1
14	00001835	Elbow	1

108.1 Motor Controller Assembly (Electric Motor Drive)

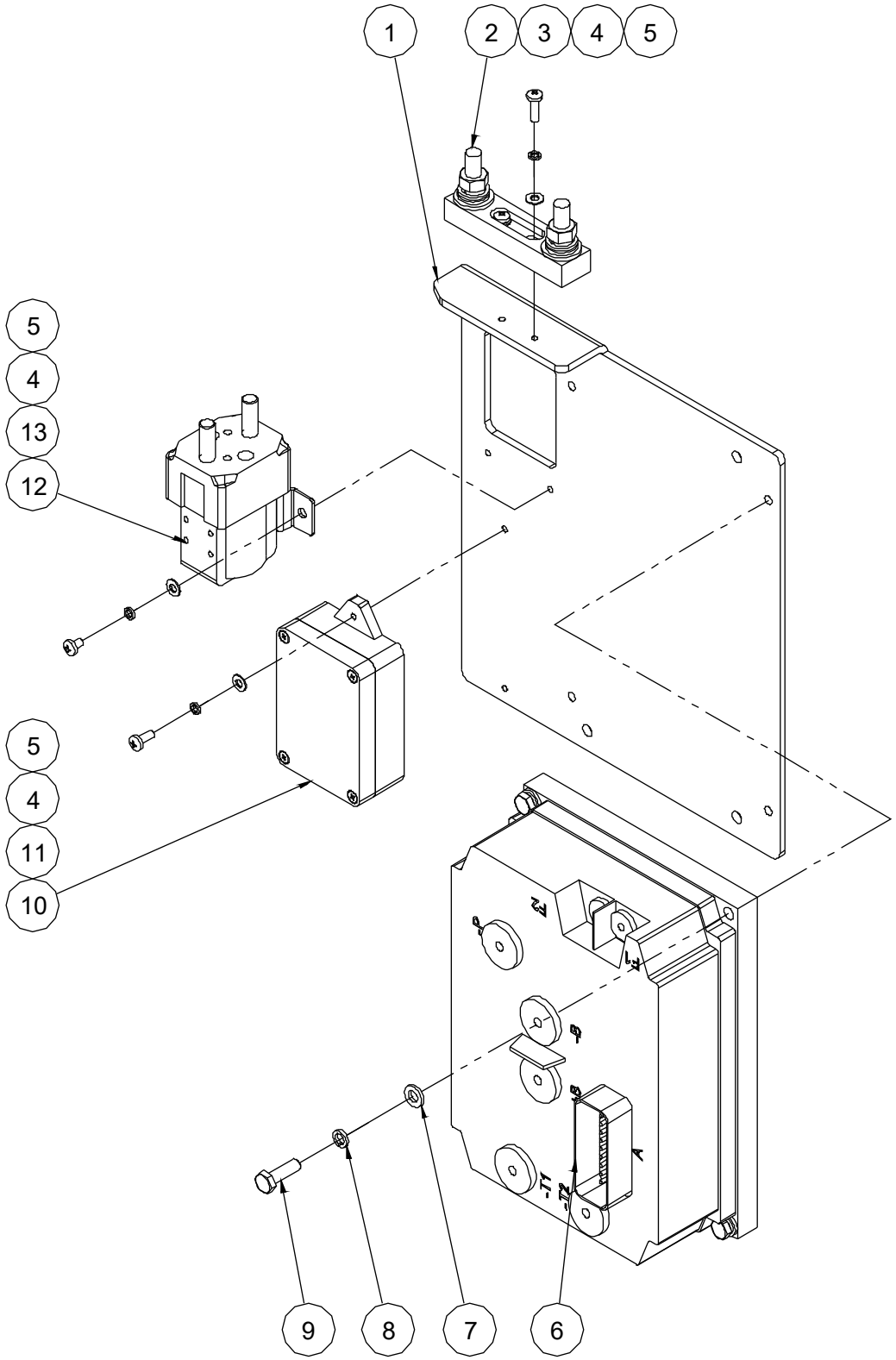

108.1 Motor Controller Assembly (Electric Motor Drive)

Item	Part No.	Description	Qty.
1	10000049	Mounting plate	1
2	00002019	300A Fuse assembly	1
--	00002020	300A Fuse	1
--	00000757	Fuse seat	1
3	00002027	Screw GB/T 818 M4×14 - H	2
4	00000779	Washer GB/T 93 4	6
5	00000778	Washer GB/T 97.1 4	6
6	00002016	Motor controller	1
7	00000620	Washer GB/T 97.1 6	4
8	00000621	Washer GB/T 93 6	4
9	00000743	Bolt GB/T 5783 M6×20	4
10	00002015	Brake module	1
11	00002026	Screw GB/T 818 M4×10 - H	2
12	00002028	DC Contactor	1
13	00002032	Screw GB/T 818 M4×6 - H	2

109.1 Rear Wheel and Ladder (Hydraulic Motor Drive)

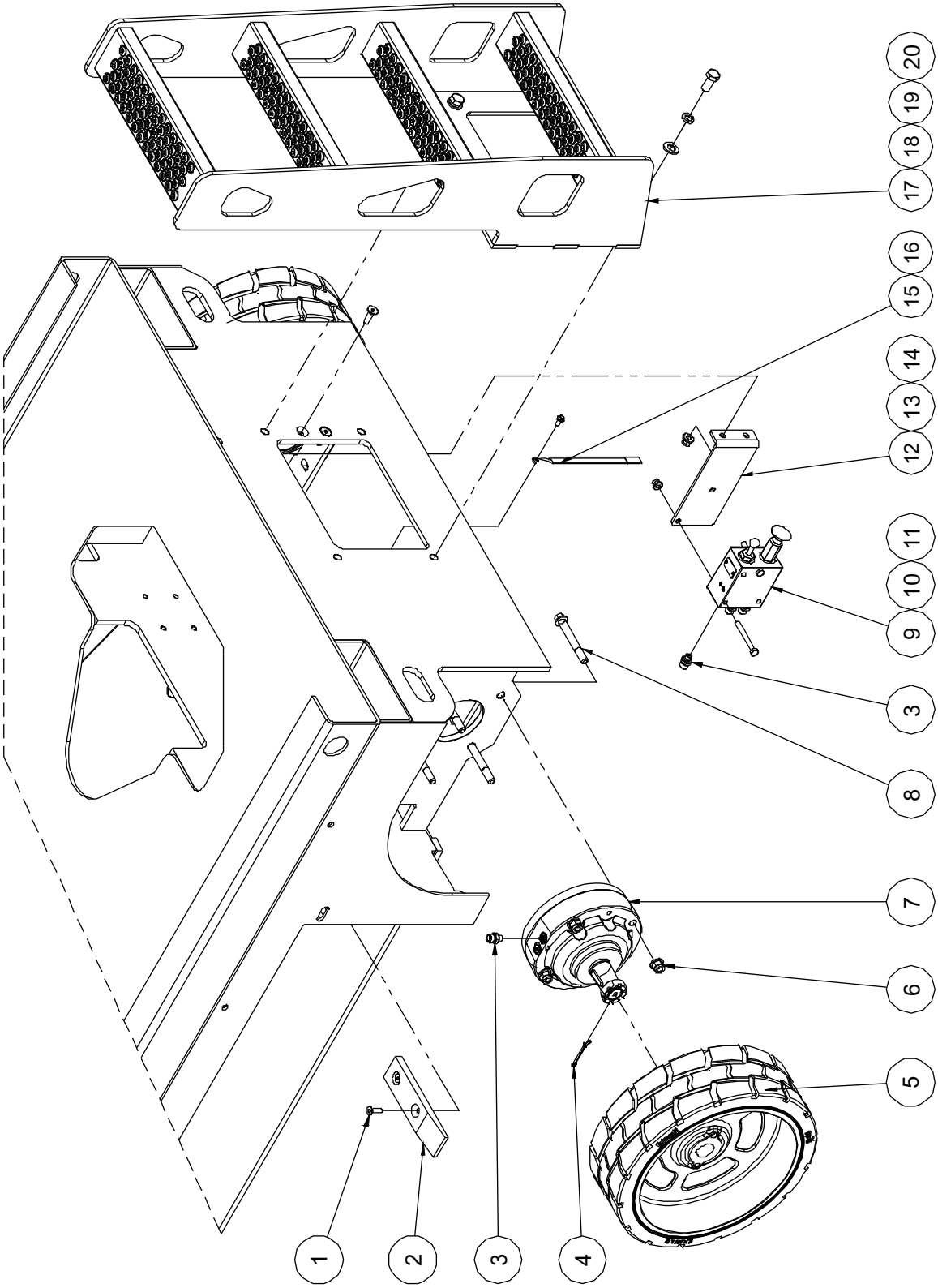

109.1 Rear Wheel and Ladder (Hydraulic Motor Drive)

Item	Part No.	Description	Qty.
1	00000838	Screw GB/T 70.3 M8×25	4
2	10000484	Spacer	2
3	00001769	Straight fitting	5
4	00000634	Cotter pin GB/T 91 4×50	2
5	10000486	Wheel	2
6	00002576	Nut GB/T 6183.1 M12	8
7	00002010	Brake (JCPT0808HD, JCPT1008HD, JCPT1012HD)	2
	00000534	Brake (JCPT1212HD, JCPT1412HD, JCPT1612HD, JCPT1614HD)	2
8	00002885	Bolt GB/T 16674 M12×100	8
9	00000530	Brake release hand pump manifold	1
10	00001860	Bolt GB/T 5782 M8×70	2
11	00002575	Nut GB/T 6183.1 M8	2
12	10000033	Mounting bracket	1
13	00002572	Nut GB/T 6183.1 M10	2
14	00000847	Screw GB/T 70.3 M10×30	2
15	10000487	Ground strap	1
16	00002865	Bolt QC/T 340 M6×14	1
17	10000679	Ladder (without circuit breaker bracket) (JCPT0808HD-CE, JCPT1008HD-CE, JCPT1012HD-CE, JCPT1008HD-ANSI, JCPT1012HD-ANSI)	1
	10000619	Ladder (without circuit breaker bracket) (JCPT1212HD-CE, JCPT1412HD-CE, JCPT1612HD-CE, JCPT1412HD-ANSI, JCPT1614HD-ANSI)	1
	10000681	Ladder (without circuit breaker bracket) (JCPT0808HD-ANSI)	1
	10000817	Ladder(without circuit breaker bracket) (JCPT1212HD-ANSI)	1
	10001805	Ladder (with circuit breaker bracket) (JCPT0808HD-CE, JCPT1008HD-CE, JCPT1012HD-CE)	1
	10001638	Ladder (with circuit breaker bracket) (JCPT1212HD-CE, JCPT1412HD-CE, JCPT1612HD-CE)	1
18	00001043	Washer GB/T 97.1 14	4

109.1 Rear Wheel and Ladder (Hydraulic Motor Drive)

Item	Part No.	Description	Qty.
19	00001258	Washer GB/T 93 14	4
20	00001259	Bolt GB/T 5783 M14×30	4

110.1 Rear Wheel and Ladder (Electric Motor Drive)

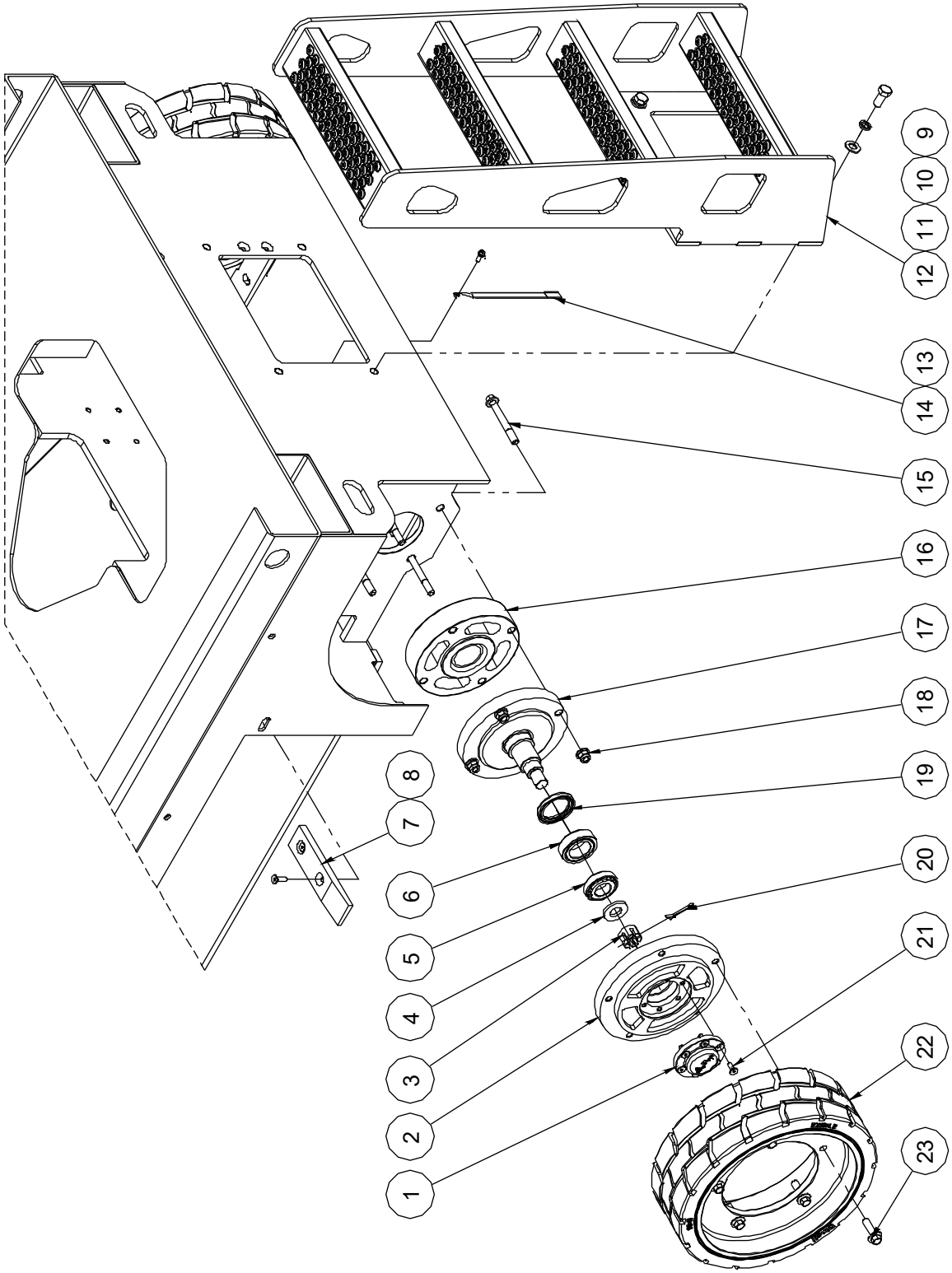

110.1 Rear Wheel and Ladder (Electric Motor Drive)

Item	Part No.	Description	Qty.
1	10000638	Cap	2
2	10000639	Bearing seat	2
3	00001884	Nut GB/T 9459 M22×1.5	2
4	10000637	Washer	2
5	00001129	Bearing 30206	2
6	00001971	Bearing 33008	2
7	10000484	Spacer	2
8	00000838	Screw GB/T 70.3 M8×25	4
9	00001259	Bolt GB/T 5783 M14×30	4
10	00001258	Washer GB/T 93 14	4
11	00001043	Washer GB/T 97.1 14	4
12	10000679	Ladder (without circuit breaker bracket) (JCPT0808DC-CE, JCPT1008DC-CE, JCPT1012DC-CE, JCPT1008DC-ANSI, JCPT1012DC-ANSI)	1
	10000619	Ladder (without circuit breaker bracket) (JCPT1212DC-CE, JCPT1412DC-CE, JCPT1612DC-CE, JCPT1412DC-ANSI, JCPT1614DC-ANSI)	1
	10000681	Ladder (without circuit breaker bracket) (JCPT0808DC-ANSI)	1
	10000817	Ladder(without circuit breaker bracket) (JCPT1212DC-ANSI)	1
	10001805	Ladder (with circuit breaker bracket) (JCPT0808DC-CE, JCPT1008DC-CE, JCPT1012DC-CE)	1
	10001638	Ladder (with circuit breaker bracket) (JCPT1212DC-CE, JCPT1412DC-CE, JCPT1612DC-CE)	1
13	00002864	Bolt QC/T 340 M6×16	1
14	10000487	Ground strap	1
15	00002885	Bolt GB/T 16674 M12×100	8
16	10000640	Terminal pad	2
17	10000642	Spindle	2
18	00002576	Nut GB/T 6183.1 M12	8
19	00002081	Seal GB/T 13871.1 FB 50 70 8 Ⅲ	2
20	00001888	Cotter pin GB/T 91 5×40	2

110.1 Rear Wheel and Ladder (Electric Motor Drive)

Item	Part No.	Description	Qty.
21	00000765	Screw GB/T 70.3 M8×20	12
22	10000641	Wheel	2
23	00002874	Bolt QC/T 340 M12×1.5×40	10

111.1 Ground Control and Limit Switch

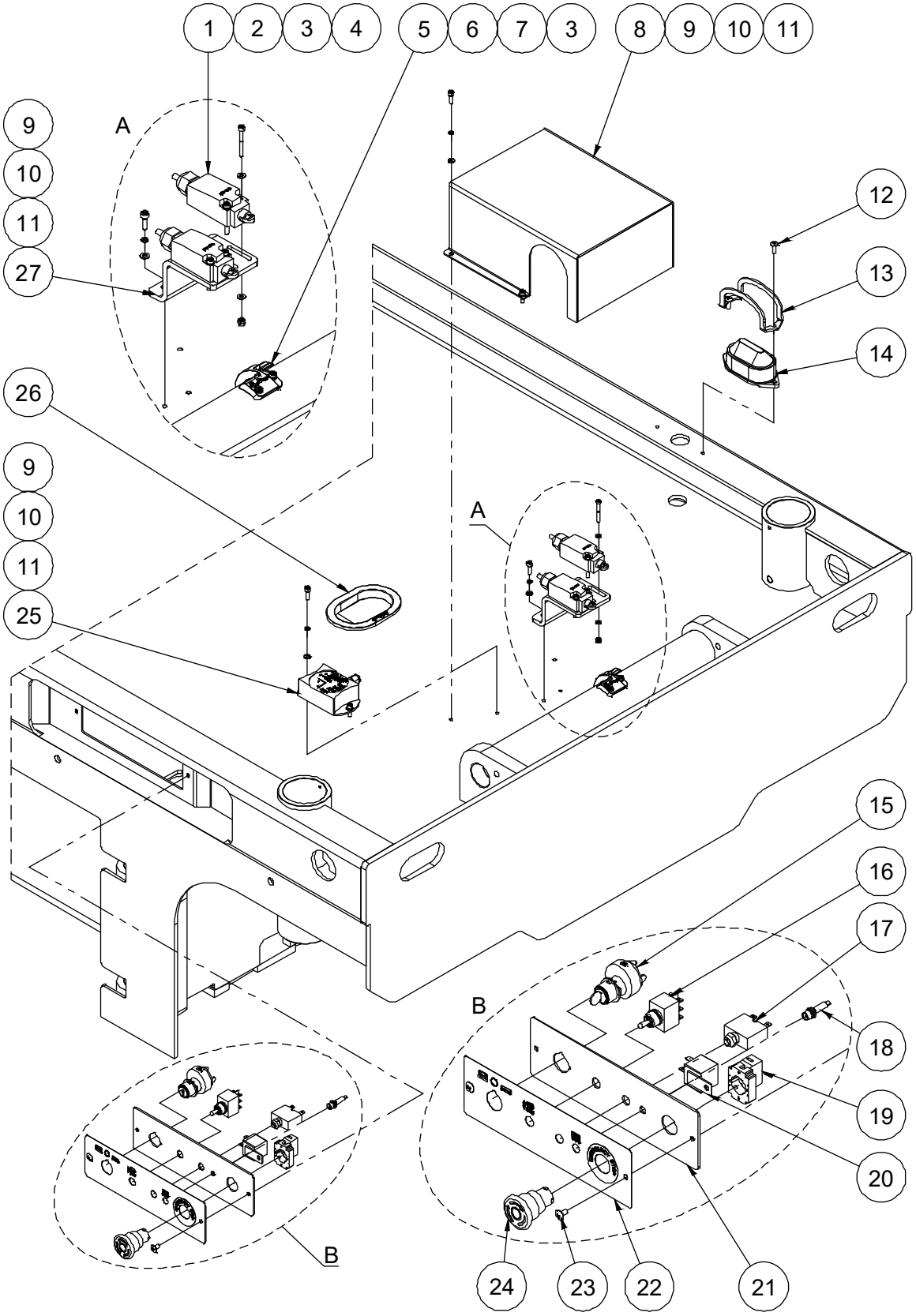

111.1 Ground Control and Limit Switch

Item	Part No.	Description	Qty.
1	00000739	Limit switch	2
2	00001235	Screw GB/T 70.1 M4×35	4
3	00000778	Washer GB/T 97.1 4	10
4	00001236	Nut GB/T 889.1 M4	4
5	10000630	Signal plate	1
6	00001054	Screw GB/T 70.1 M4×12	2
7	00000779	Washer GB/T 93 4	2
8	10000629	Cover	1
9	00001246	Screw GB/T 70.1 M5×16	8
10	00000606	Washer GB/T 93 5	8
11	00000605	Washer GB/T 97.1 5	8
12	00002523	Screw GB/T 973 M5×16	2
13	10000488	Beacon cover	1
14	00000740	Beacon	1
15	00001243	Key switch	1
--	00003050	Key	1
16	00000738	Toggle switch	1
17	00000697	Circuit breaker	1
18	00000734	Indicator	1
19	00000752	Base with 1 NC contact	1
20	00002561	Relay	1
21	10000496	Ground control panel	1
22	09110001	Decal, Ground control panel	1
23	00000999	Screw GB/T 973 M5×10	2
24	00000754	Red mushroom head	1
25	00000694	Tilt sensor	1
26	10000039	Sheath	1
27	10000631	Switch bracket	1

112.1 Counterweight

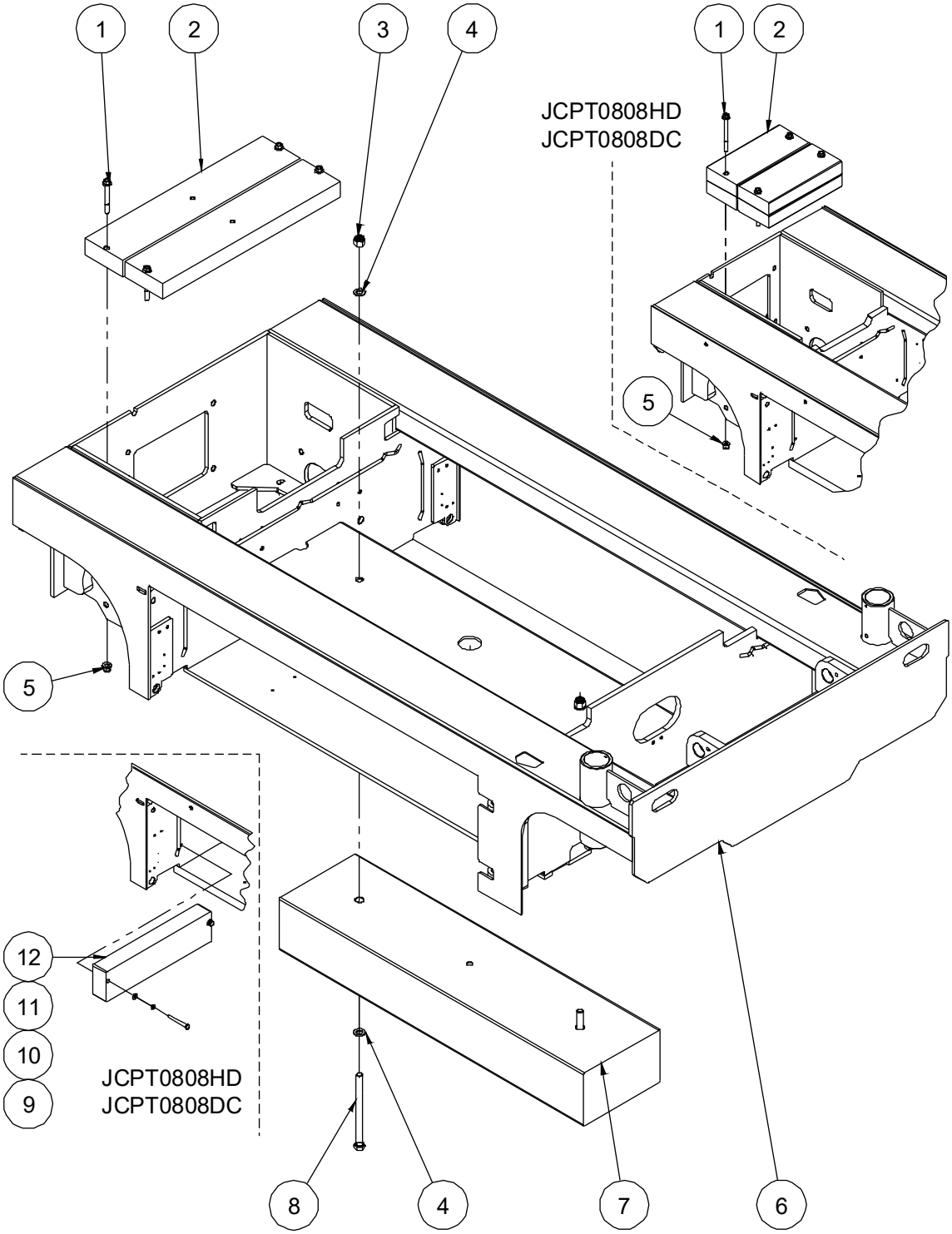

112.1 Counterweight

Item	Part No.	Description	Qty.
1	00002641	Bolt GB/T 16674 M12×130 (JCPT0808HD/DC-CE)	4
	00002882	Bolt GB/T 16674 M12×90 (JCPT1212HD-CE)	4
	00002882	Bolt GB/T 16674 M12×90 (JCPT1212HD-ANSI, JCPT1212DC-CE)	2
2	10000011	Counterweight 18 (JCPT0808HD/DC-CE)	4
	10000489	Counterweight 35 (JCPT1212HD-CE)	2
	10000489	Counterweight 35 (JCPT1212HD-ANSI, JCPT1212DC-CE)	1
3	00001257	Nut GB/T 6182 M16 (JCPT1012HD/DC-CE, JCPT1212HD/DC-CE, JCPT1412HD/DC-CE&ANSI)	2
4	00000997	Washer GB/T 97.1 16 (JCPT1012HD/DC-CE, JCPT1212HD/DC-CE, JCPT1412HD/DC-CE&ANSI)	4
5	00002576	Nut GB/T 6183.1 M12 (JCPT0808HD/DC-CE, JCPT1212HD-CE)	4
	00002576	Nut GB/T 6183.1 M12 (JCPT1212HD-ANSI, JCPT1212DC-CE)	2
6	10001860	Frame weldment (JCPT0808HD/DC, JCPT1008HD/DC)	1
	10001992	Frame weldment (JCPT1012HD/DC, JCPT1212HD/DC)	1
	10001834	Frame weldment (JCPT1412HD/DC)	1
	10001993	Frame weldment (JCPT1612HD/DC)	1
	10000983	Frame weldment (JCPT1614HD/DC)	1
7	10000483	Counterweight 400 (JCPT1012HD/DC-CE, JCPT1212HD/DC-CE, JCPT1412HD/DC-ANSI)	1
	10000777	Counterweight 180 (JCPT1412HD/DC-CE)	1
8	00001256	Bolt GB/T 5782 M16×220 (JCPT1012HD/DC-CE, JCPT1212HD/DC-CE, JCPT1412HD/DC-CE&ANSI)	2
9	00001027	Bolt GB/T 5782 M10×80 (JCPT0808HD/DC-CE)	2
10	00000679	Washer GB/T 93 10 (JCPT0808HD/DC-CE)	2
11	00000615	Washer GB/T 97.1 10 (JCPT0808HD/DC-CE)	2
12	10000061	Counterweight 28 (JCPT0808HD/DC-CE)	1

Section 2
Scissor

201.1 Scissor Assembly (JCPT0808HD/DC)

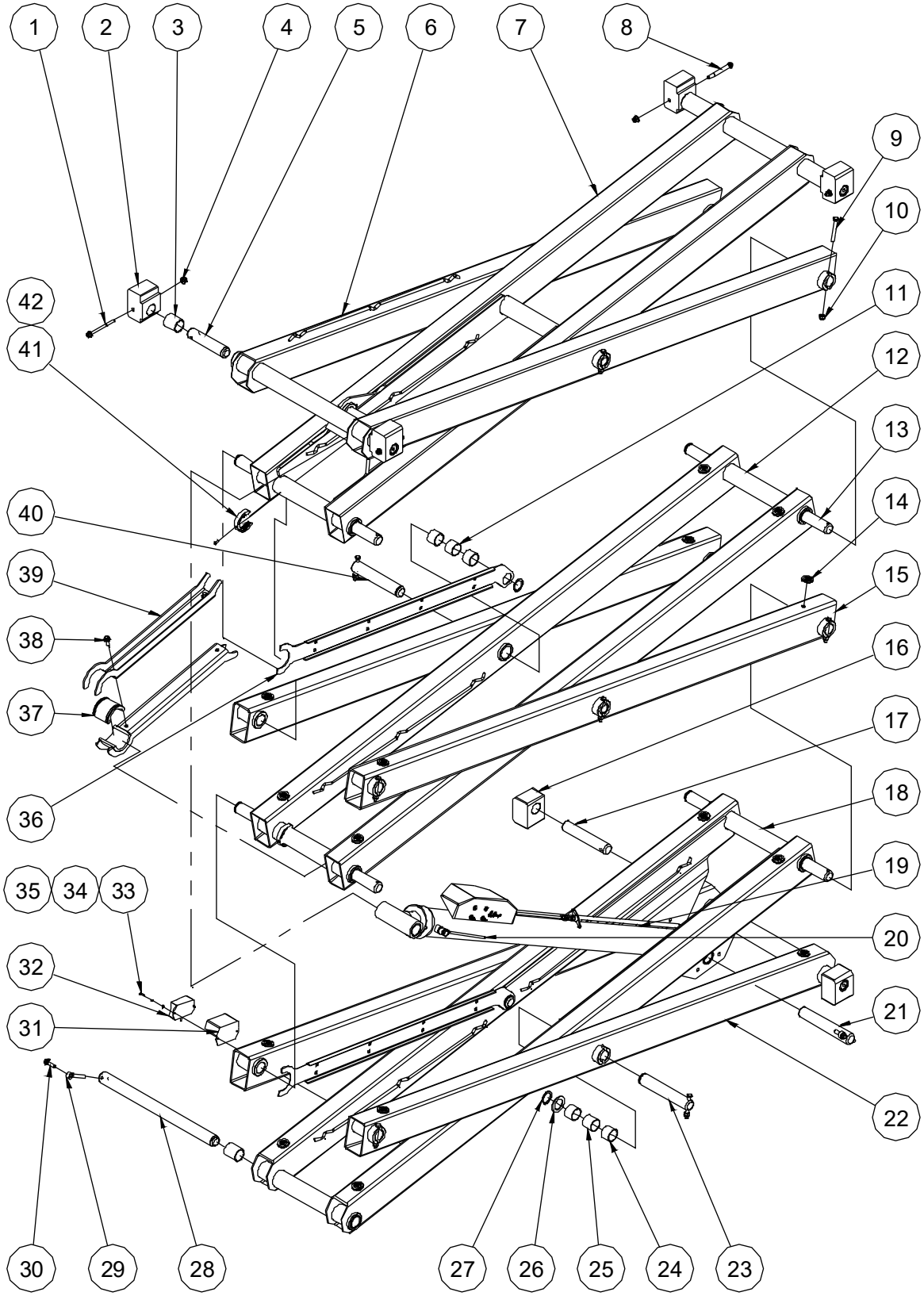

201.1 Scissor Assembly (JCPT0808HD/DC)

Item	Part No.	Description	Qty.
1	00002891	Bolt GB/T 16674 M10×110	2
2	10000252	Platform slider	4
3	00000439	8813-38.1×44.45×50.8 Bearing	6
4	00002572	Nut GB/T 6183.1 M10	7
5	00002098	896B-38.1×146 Pin	4
6	10000605	Outer arm 3	1
7	10000603	Inner arm 3	1
8	00002884	Bolt GB/T 16674 M10×100	2
9	00001027	Bolt GB/T 5782 M10×80	11
10	00000623	Nut GB/T 6182 M10	11
11	10000256	Spacer sleeve	2
12	10000282	Inner arm 2	1
13	00000568	898-38.1×638.5 Pin	5
14	10000264	Block	16
15	10000285	Outer arm	1
16	10000255	Chassis slider	2
17	00000598	895B-38.1×185 Pin	2
18	10000266	Inner arm 1	1
19		Lower lift cylinder assembly (without seal kit) (refer to 401.1)	1
20	10001170	Hose	1
21	00000595	895-38.1×220 Pin	2
22	10000601	Outer arm 1	1
23	00000566	898-38.1×205.5 Pin	2
24	00000438	8813-38.1×44.45×31.75 Bearing	18
25	10000257	Spacer sleeve	2
26	10000254	Washer	6
27	00000787	Circlips JB/ZQ 4342-38	9
28	00000577	896-38.1×515 Pin	1

201.1 Scissor Assembly (JCPT0808HD/DC)

Item	Part No.	Description	Qty.
29	00000220	8902-10080 Pin	3
30	00002877	Bolt QC/T 340 M10×35	2
31	10000251	Sensor cover (JCPT0808HD/DC-CE)	1
32	00000695	Angle sensor (JCPT0808HD/DC-CE)	1
33	00001054	Screw GB/T 70.1 M4×12 (JCPT0808HD/DC-CE)	2
34	00000779	Washer GB/T 93 4 (JCPT0808HD/DC-CE)	2
35	00000778	Washer GB/T 97.1 4 (JCPT0808HD/DC-CE)	2
36	10000261	Line bridge	2
37	10000260	Safety arm bushing	2
38	00002887	Bolt QC/T 340 M10×25	3
39	10000259	Safety arm	2
40	00000565	898-38.1×198.5 Pin	2
41	10000258	Collar	2
42	00000822	Screw GB/T 70.3 M5×16	2

202.1 Scissor Assembly (JCPT1008HD/DC)

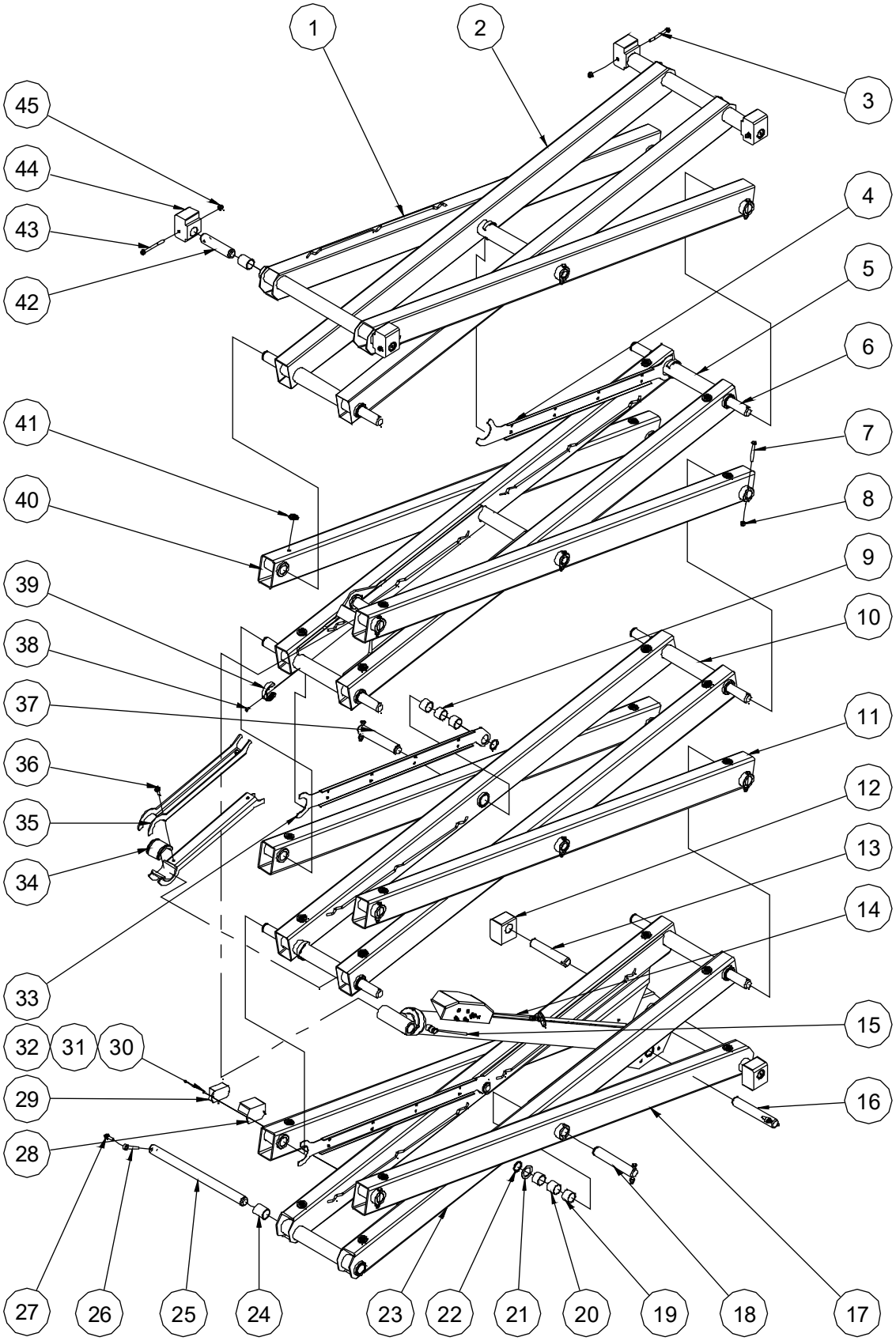

202.1 Scissor Assembly (JCPT1008HD/DC)

Item	Part No.	Description	Qty.
1	10000605	Outer arm 3	1
2	10000737	Inner arm 4	1
3	00002884	Bolt GB/T 16674 M10×100	2
4	10000044	Line bridge	1
5	10000735	Inner arm 3	1
6	00000568	898-38.1×638.5 Pin	8
7	00001027	Bolt GB/T 5782 M10×80	14
8	00000623	Nut GB/T 6182 M10	14
9	10000256	Spacer sleeve	2
10	10000282	Inner arm 2	1
11	10000285	Outer arm	1
12	10000255	Chassis slider	2
13	00000598	895B-38.1×185 Pin	2
14		Lower lift cylinder assembly (without seal kit) (refer to 401.1)	1
15	10001170	Hose	1
16	00000595	895-38.1×220 Pin	2
17	10000601	Outer arm 1	1
18	00000566	898-38.1×205.5 Pin	2
19	00000438	8813-38.1×44.45×31.75 Bearing	24
20	10000257	Spacer sleeve	2
21	10000254	Washer	10
22	00000787	Circlips JB/ZQ 4342-38	12
23	10000266	Inner arm 1	1
24	00000439	8813-38.1×44.45×50.8 Bearing	6
25	00000577	896-38.1×515 Pin	1
26	00000220	8902-10080 Pin	3
27	00002877	Bolt QC/T 340 M10×35	2
28	10000251	Sensor cover (JCPT1008HD/DC-CE)	1

202.1 Scissor Assembly (JCPT1008HD/DC)

Item	Part No.	Description	Qty.
29	00000695	Angle sensor (JCPT1008HD/DC-CE)	1
30	00000778	Washer GB/T 97.1 4 (JCPT1008HD/DC-CE)	2
31	00000779	Washer GB/T 93 4 (JCPT1008HD/DC-CE)	2
32	00001054	Screw GB/T 70.1 M4×12 (JCPT1008HD/DC-CE)	2
33	10000261	Line bridge	2
34	10000260	Safety arm bushing	2
35	10000259	Safety arm	2
36	00002887	Bolt QC/T 340 M10×25	3
37	00000565	898-38.1×198.5 Pin	2
38	00000822	Screw GB/T 70.3 M5×16	4
39	10000258	Collar	4
40	10000736	Outer arm 3	1
41	10000264	Block	24
42	00002098	896B-38.1×146 Pin	4
43	00002891	Bolt GB/T 16674 M10×110	2
44	10000252	Platform slider	4
45	00002572	Nut GB/T 6183.1 M10	7

203.1 Scissor Assembly (JCPT1012HD/DC)

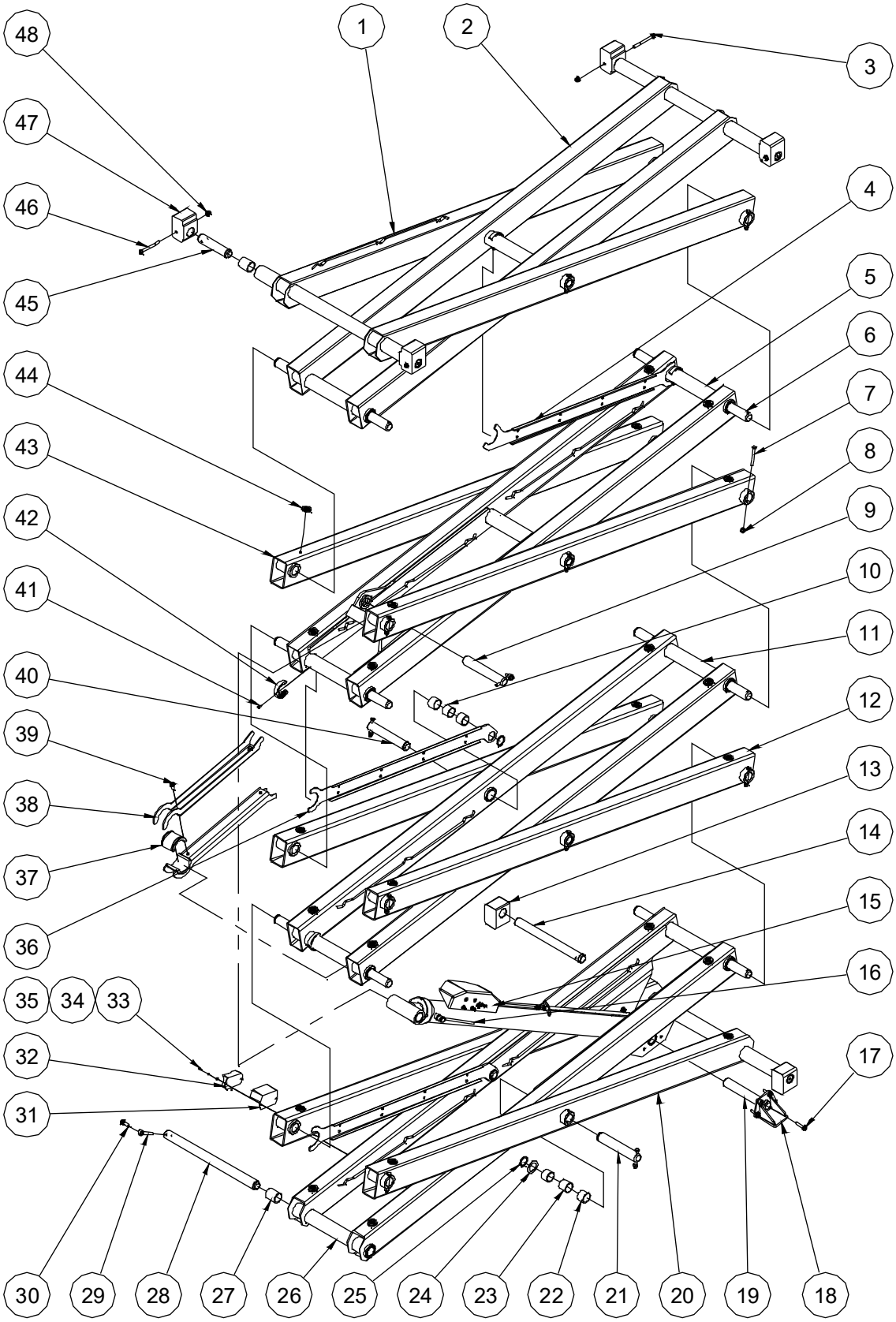

203.1 Scissor Assembly (JCPT1012HD/DC)

Item	Part No.	Description	Qty.
1	10000293	Outer arm 5	1
2	10000739	Inner arm 4	1
3	00002891	Bolt GB/T 16674 M10×110	2
4	10000044	Line bridge	1
5	10000735	Inner arm 3	1
6	00000568	898-38.1×638.5 Pin	8
7	00001027	Bolt GB/T 5782 M10×80	14
8	00000623	Nut GB/T 6182 M10	14
9	00000595	895-38.1×220 Pin	1
10	10000256	Spacer sleeve	2
11	10000282	Inner arm 2	1
12	10000285	Outer arm	1
13	10000255	Chassis slider	2
14	00002096	896B-38.1×25A Pin	2
15		Lower lift cylinder assembly (without seal kit) (refer to 401.1)	1
16	10001170	Hose	1
17	00002889	Bolt QC/T 340 M10×45	1
18	10000265	Pothole pusher	2
19	00000596	895-38.1×236 Pin	1
20	10000278	Outer arm 1	1
21	00000566	898-38.1×205.5 Pin	2
22	00000438	8813-38.1×44.45×31.75 Bearing	24
23	10000257	Spacer sleeve	2
24	10000254	Washer	10
25	00000787	Circlips JB/ZQ 4342-38	12
26	10000266	Inner arm 1	1
27	00000439	8813-38.1×44.45×50.8 Bearing	6
28	00000577	896-38.1×515 Pin	1

203.1 Scissor Assembly (JCPT1012HD/DC)

Item	Part No.	Description	Qty.
29	00000220	8902-10080 Pin	3
30	00002877	Bolt QC/T 340 M10×35	8
31	10000251	Sensor cover (JCPT1012HD/DC-CE)	1
32	00000695	Angle sensor (JCPT1012HD/DC-CE)	1
33	00001054	Screw GB/T 70.1 M4×12 (JCPT1012HD/DC-CE)	2
34	00000778	Washer GB/T 97.1 4 (JCPT1012HD/DC-CE)	2
35	00000779	Washer GB/T 93 4 (JCPT1012HD/DC-CE)	2
36	10000261	Line bridge	2
37	10000260	Safety arm bushing	2
38	10000259	Safety arm	2
39	00002887	Bolt QC/T 340 M10×25	3
40	00000565	898-38.1×198.5 Pin	2
41	00000822	Screw GB/T 70.3 M5×16	4
42	10000258	Collar	4
43	10000736	Outer arm 3	1
44	10000264	Block	24
45	00002098	896B-38.1×146 Pin	4
46	00002884	Bolt GB/T 16674 M10×100	2
47	10000252	Platform slider	4
48	00002572	Nut GB/T 6183.1 M10	14

204.1 Scissor Assembly (JCPT1212HD/DC)

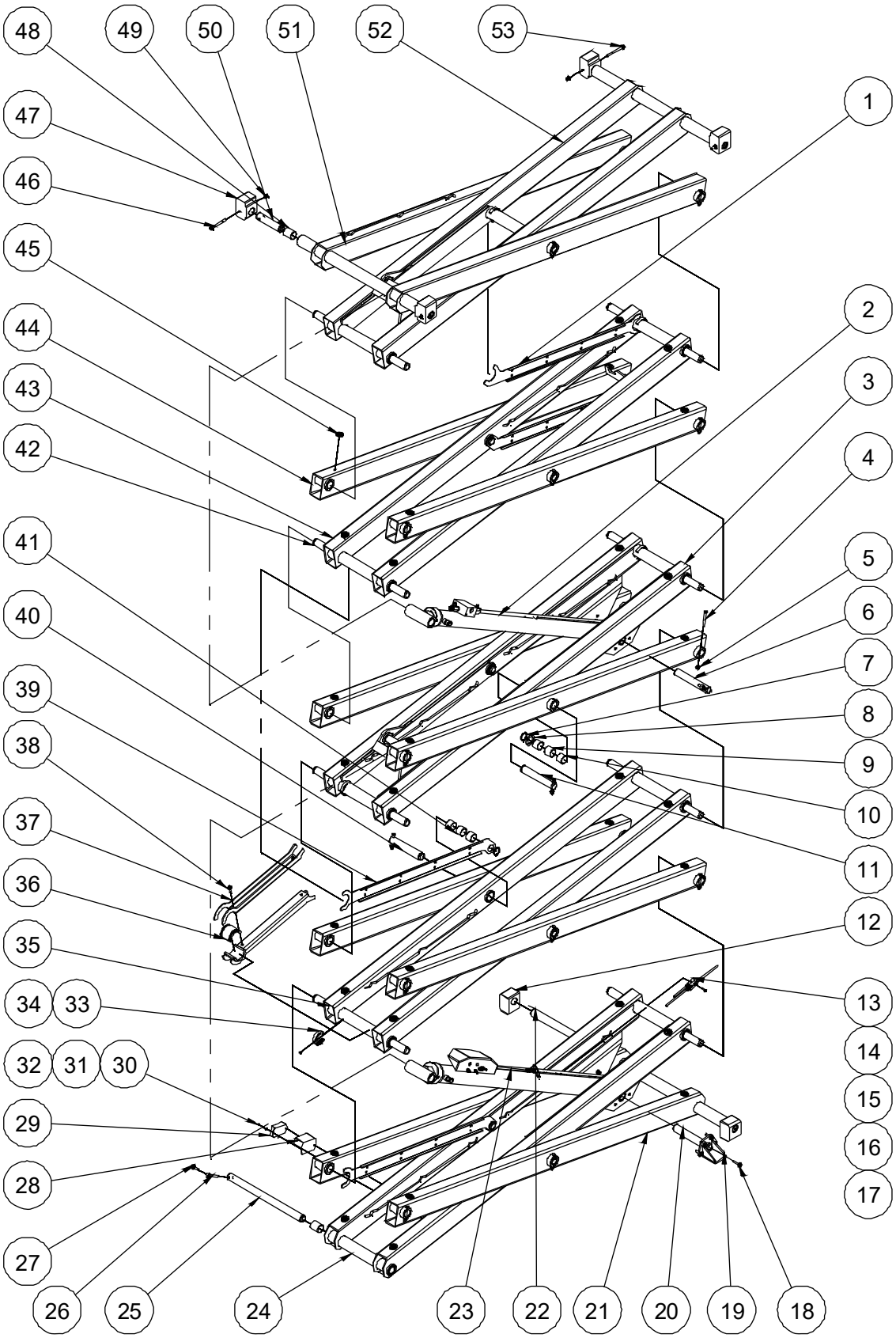

204.1 Scissor Assembly (JCPT1212HD/DC)

Item	Part No.	Description	Qty.
1	10000044	Line bridge	1
2		Upper lift cylinder assembly (without seal kit) (refer to 402.1)	1
3	10000286	Inner arm 3	1
4	00001027	Bolt GB/T 5782 M10×80	19
5	00000623	Nut GB/T 6182 M10	19
6	00000595	895-38.1×220 Pin	3
7	00000787	Circlips JB/ZQ 4342-38	17
8	10000254	Washer	14
9	10000257	Spacer sleeve	4
10	00000438	8813-38.1×44.45×31.75 Bearing	34
11	00000566	898-38.1×205.5 Pin	4
12	10000255	Chassis slider	2
13	10000425	Hydraulic hoses manifolds	1
14	00000832	Screw GB/T 70.3 M6×25	2
15	10000403	Hose	1
16	10001171	Hose	1
17	10000402	Hose	1
18	00002889	Bolt QC/T 340 M10×45	1
19	10000265	Pothole pusher	2
20	00000596	895-38.1×236 Pin	1
21	10000278	Outer arm 1	1
22	00002096	896B-38.1×25A Pin	2
23		Lower lift cylinder assembly (without seal kit) (refer to 401.1)	1
24	10000266	Inner arm 1	1
25	00000577	896-38.1×515 Pin	1
26	00000220	8902-10080 Pin	5
27	00002877	Bolt QC/T 340 M10×35	9
28	10000251	Sensor cover (JCPT1212HD/DC-CE)	1

204.1 Scissor Assembly (JCPT1212HD/DC)

Item	Part No.	Description	Qty.
29	00000695	Angle sensor (JCPT1212HD/DC-CE)	1
30	00001054	Screw GB/T 70.1 M4×12 (JCPT1212HD/DC-CE)	2
31	00000778	Washer GB/T 97.1 4 (JCPT1212HD/DC-CE)	2
32	00000779	Washer GB/T 93 4 (JCPT1212HD/DC-CE)	2
33	10000258	Collar	5
34	00000822	Screw GB/T 70.3 M5×16	5
35	10000282	Inner arm 2	1
36	10000260	Safety arm bushing	2
37	10000259	Safety arm	2
38	00002887	Bolt QC/T 340 M10×25	4
39	10000261	Line bridge	3
40	00000565	898-38.1×198.5 Pin	4
41	10000256	Spacer sleeve	4
42	00000568	898-38.1×638.5 Pin	9
43	10000291	Inner arm 4	1
44	10000285	Outer arm	3
45	10000264	Block	32
46	00002884	Bolt GB/T 16674 M10×100	2
47	10000252	Platform slider	4
48	00000439	8813-38.1×44.45×50.8 Bearing	6
49	00002572	Nut GB/T 6183.1 M10	15
50	00002098	896B-38.1×146 Pin	4
51	10000293	Outer arm 5	1
52	10000296	Inner arm 5	1
53	00002891	Bolt GB/T 16674 M10×110	2

205.1 Scissor Assembly (JCPT1412HD/DC, JCPT1612HD/DC, JCPT1614HD/DC)

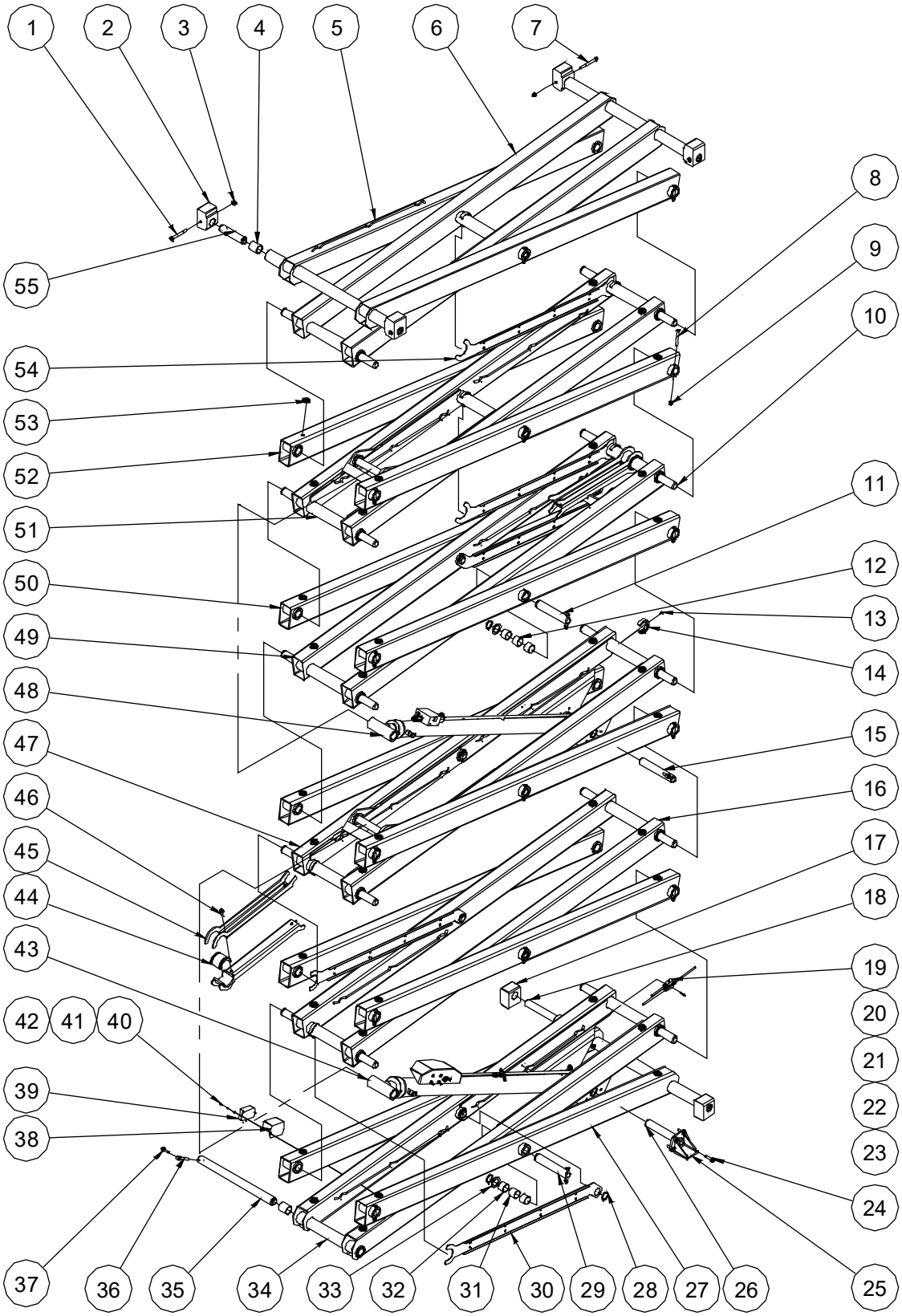

205.1 Scissor Assembly (JCPT1412HD/DC, JCPT1612HD/DC, JCPT1614HD/DC)

Item	Part No.	Description	Qty.
1	00002884	Bolt GB/T 16674 M10×100	2
2	10000252	Platform slider	4
3	00002572	Nut GB/T 6183.1 M10	17
4	00000439	8813-38.1×44.45×50.8 Bearing	6
5	10000293	Outer arm 5 (JCPT1412HD/DC)	1
	10000767	Outer arm 6 (JCPT1612HD/DC, JCPT1614HD/DC)	1
6	10000739	Inner arm 4 (JCPT1412HD/DC)	1
	10000769	Inner arm 6 (JCPT1612HD/DC, JCPT1614HD/DC)	1
7	00002891	Bolt GB/T 16674 M10×110	2
8	00001027	Bolt GB/T 5782 M10×80	22
9	00000623	Nut GB/T 6182 M10	22
10	00000568	898-38.1×638.5 Pin	12
11	00000565	898-38.1×198.5 Pin	4
12	10000256	Spacer sleeve	4
13	00000822	Screw GB/T 70.3 M5×16	7
14	10000258	Collar	7
15	00000595	895-38.1×220 Pin	3
16	10000282	Inner arm 2 (JCPT1412HD/DC)	1
	10000755	Inner arm 2 (JCPT1612HD/DC, JCPT1614HD/DC)	1
17	10000255	Chassis slider	2
18	00002096	896B-38.1×25A Pin (JCPT1412HD/DC, JCPT1612HD/DC)	2
	00002097	896B-38.1×25B Pin (JCPT1614HD/DC)	2
19	10000425	Hydraulic hoses manifolds	1
20	10001171	Hose (JCPT1412HD/DC)	1
	10001172	Hose (JCPT1612HD/DC, JCPT1614HD/DC)	1
21	10000402	Hose (JCPT1412HD/DC)	1
	10000084	Hose (JCPT1612HD/DC, JCPT1614HD/DC)	1

205.1 Scissor Assembly (JCPT1412HD/DC, JCPT1612HD/DC, JCPT1614HD/DC)

Item	Part No.	Description	Qty.
22	00000832	Screw GB/T 70.3 M6×25	2
23	10000403	Hose (JCPT1412HD/DC)	1
	10000085	Hose (JCPT1612HD/DC, JCPT1614HD/DC)	1
24	00002889	Bolt QC/T 340 M10×45	1
25	10000265	Pothole pusher	2
26	00000596	895-38.1×236 Pin	1
27	10000278	Outer arm 1 (JCPT1412HD/DC)	1
	10000753	Outer arm 1 (JCPT1612HD/DC)	1
	10000774	Outer arm 1 (JCPT1614HD/DC)	1
28	00000787	Circlips JB/ZQ 4342-38	20
29	00000566	898-38.1×205.5 Pin	4
30	10000261	Line bridge (JCPT1412HD/DC)	3
	10000770	Line bridge (JCPT1612HD/DC, JCPT1614HD/DC)	3
31	10000257	Spacer sleeve	4
32	00000438	8813-38.1×44.45×31.75 Bearing	40
33	10000254	Washer	17
34	10000266	Inner arm 1 (JCPT1412HD/DC)	1
	10000743	Inner arm 1 (JCPT1612HD/DC, JCPT1614HD/DC)	1
35	00000577	896-38.1×515 Pin	1
36	00000220	8902-10080 Pin	5
37	00002877	Bolt QC/T 340 M10×35	9
38	10000251	Sensor cover (JCPT1412HD/DC-CE, JCPT1612HD/DC-CE)	1
39	00000695	Angle sensor (JCPT1412HD/DC-CE, JCPT1612HD/DC-CE)	1
40	00001054	Screw GB/T 70.1 M4×12 (JCPT1412HD/DC-CE, JCPT1612HD/DC-CE)	2
41	00000779	Washer GB/T 93 4 (JCPT1412HD/DC-CE, JCPT1612HD/DC-CE)	2

205.1 Scissor Assembly (JCPT1412HD/DC, JCPT1612HD/DC, JCPT1614HD/DC)

Item	Part No.	Description	Qty.
42	00000778	Washer GB/T 97.1 4 (JCPT1412HD/DC-CE, JCPT1612HD/DC-CE)	2
43		Lower lift cylinder assembly (without seal kit) (refer to 401.1)	1
44	10000260	Safety arm bushing	4
45	10000259	Safety arm	4
46	00002887	Bolt QC/T 340 M10×25	6
47	10000286	Inner arm 3 (JCPT1412HD/DC)	1
	10000762	Inner arm 3 (JCPT1612HD/DC, JCPT1614HD/DC)	1
48		Upper lift cylinder assembly (without seal kit) (refer to 402.1)	1
49	10000291	Inner arm 4 (JCPT1412HD/DC)	1
	10000766	Inner arm 4 (JCPT1612HD/DC, JCPT1614HD/DC)	1
50	10000285	Outer arm (JCPT1412HD/DC)	3
	10000758	Outer arm 2-3 (JCPT1612HD/DC, JCPT1614HD/DC)	3
51	10000735	Inner arm 3 (JCPT1412HD/DC)	1
	10000765	Inner arm 5 (JCPT1612HD/DC, JCPT1614HD/DC)	1
52	10000736	Outer arm 3 (JCPT1412HD/DC)	1
	10000760	Outer arm 5 (JCPT1612HD/DC, JCPT1614HD/DC)	1
53	10000264	Block	40
54	10000044	Line bridge (JCPT1412HD/DC)	2
	10000771	Line bridge (JCPT1612HD/DC, JCPT1614HD/DC)	2
55	00002098	896B-38.1×146 Pin	4

Section 3
Platform

301.1 Main Platform Assembly (JCPT0808HD/DC, JCPT1008HD/DC)

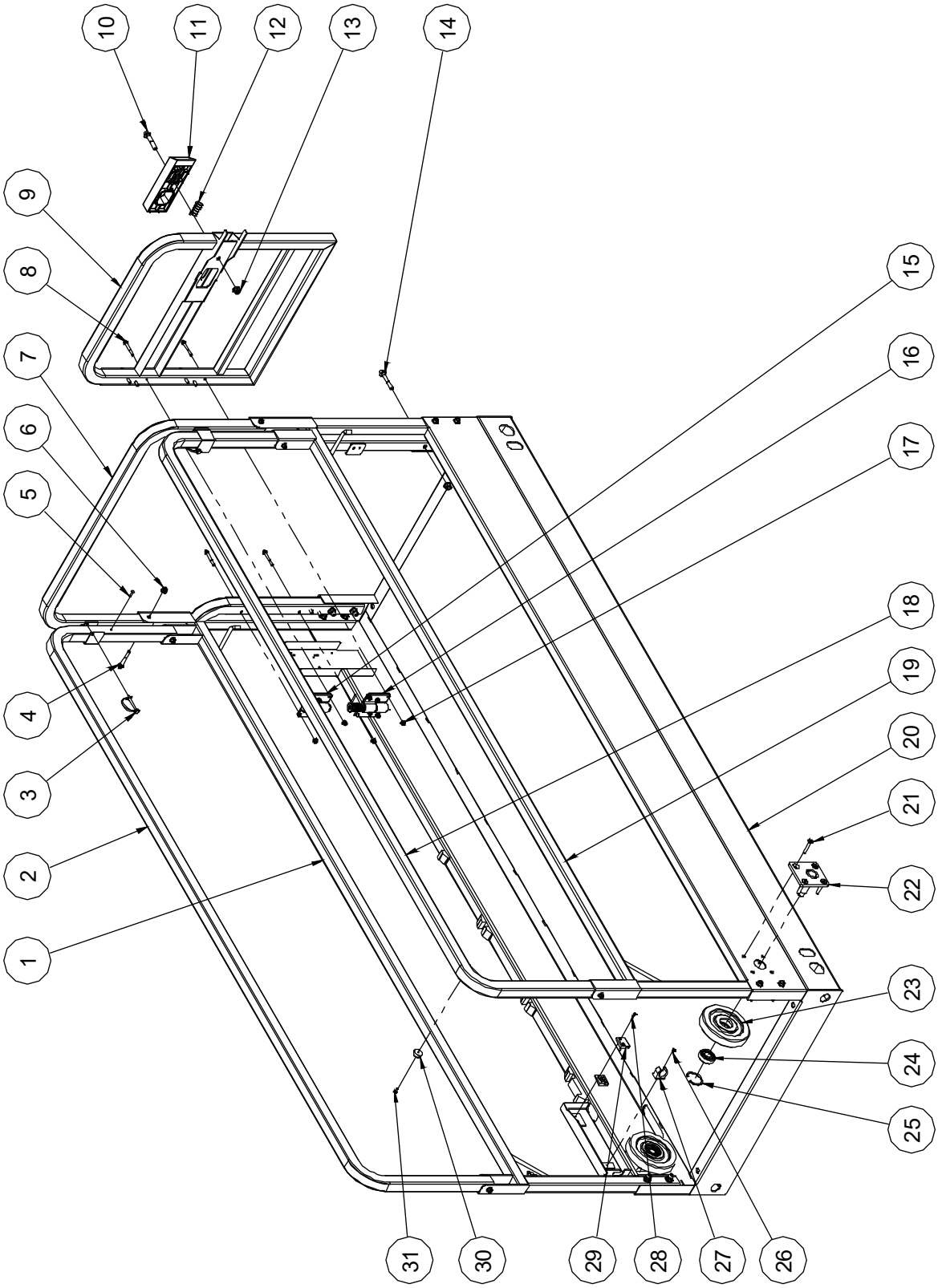

301.1 Main Platform Assembly (JCPT0808HD/DC, JCPT1008HD/DC)

Item	Part No.	Description	Qty.
1	10002069	Lower main rail, right	1
2	10000716	Upper main rail, right	1
3	10001178	Inserted pin	2
4	00002571	Bolt GB/T 16674 M8×55	6
5	00001991	Rivet GB/T 12618.4 4.8×16	2
6	00002575	Nut GB/T 6183.1 M8	6
7	10002077	Rear rail	1
8	00002581	Bolt GB/T 16674 M6×50	12
9	10002085	Entry gate	1
10	00002547	Bolt GB/T 16674 M10×55	1
11	10000331	Latch handle	1
12	10000367	Spring	1
13	00002572	Nut GB/T 6183.1 M10	13
14	00002570	Bolt GB/T 16674 M10×60	12
15	10000299	Hinge A	1
16	10000302	Hinge B	1
17	00002574	Nut GB/T 6183.1 M6	12
18	10002076	Upper main rail, left	1
19	10002073	Lower main rail, left	1
20	10002088	Main deck weldment	1
21	00001154	Screw GB/T 70.3 M8×45	8
22	10000307	Roller bracket	2
23	10002031	Roller	2
24	00001295	Bearing GB/T 276-1994 - 6204	2
25	00000887	Circlips GB/T 893.1-47	2
26	00004385	Screw GB/T 823 M4×8	1
27	00001823	Clip 24	1
28	00002064	Screw GB/T 70.1 M4×20	2

301.1 Main Platform Assembly (JCPT0808HD/DC, JCPT1008HD/DC)

Item	Part No.	Description	Qty.
29	10001776	Wire clip	2
30	10000376	Bumper	1
31	00000607	Screw GB/T 818 M5×12 - H	1

302.1 Platform Extension Assembly (JCPT0808HD/DC, JCPT1008HD/DC)

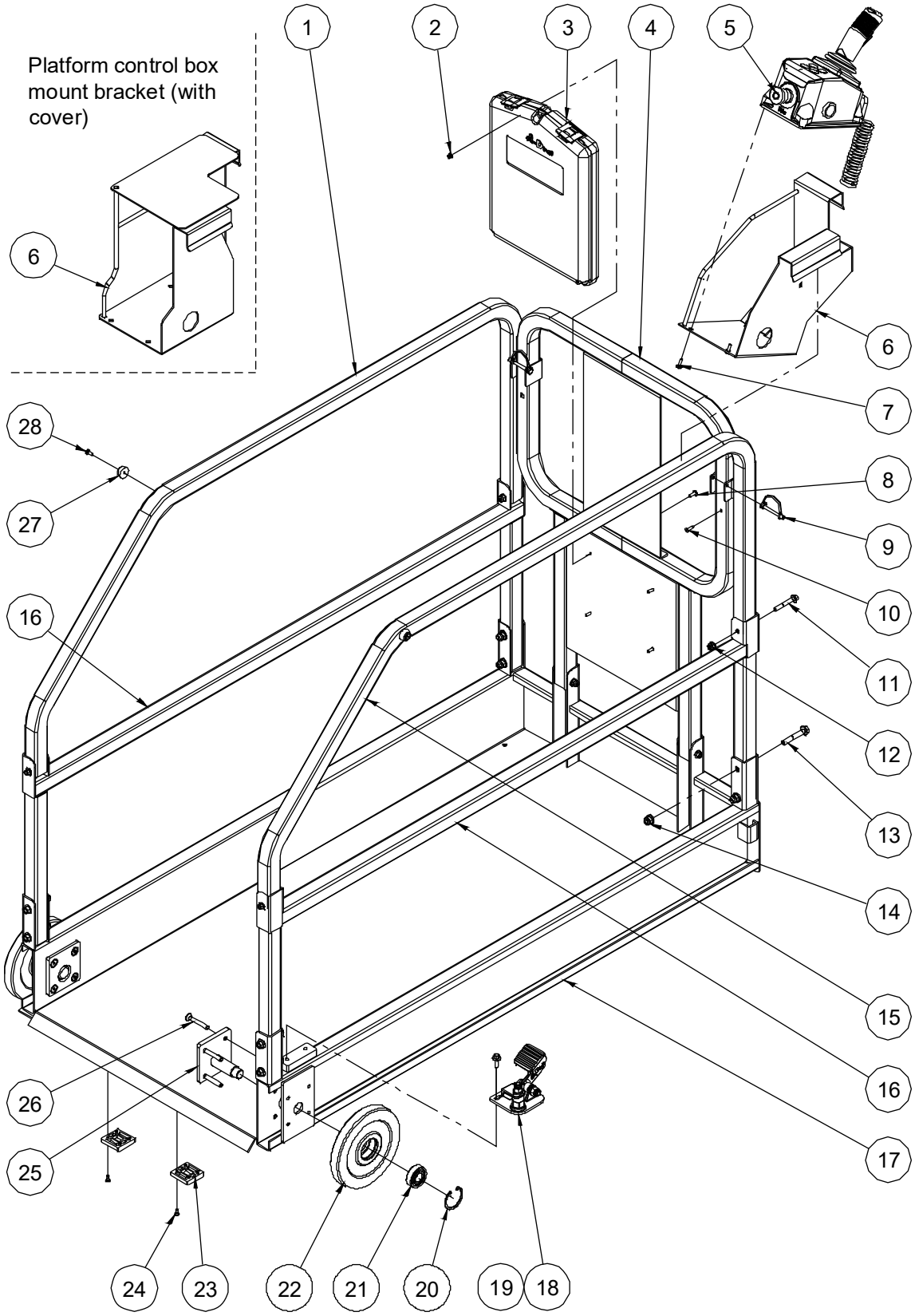

302.1 Platform Extension Assembly (JCPT0808HD/DC, JCPT1008HD/DC)

Item	Part No.	Description	Qty.
1	10002074	Left extension rail	1
2	00002573	Nut GB/T 6183.1 M5	4
3	50000555	Manual box	1
4	10000709	Front rail	1
5	00000706	Platform control box assembly (refer to 306.1)	1
6	10000390	Platform control box mount bracket	1
	10001715	Platform control box mount bracket (with cover)	1
7	00001986	Screw GB/T 818 M6×16 - H	4
8	00002523	Screw GB/T 973 M5×16	4
9	10001178	Inserted pin	2
10	00001991	Rivet GB/T 12618.4 4.8×16	2
11	00002571	Bolt GB/T 16674 M8×55	6
12	00002575	Nut GB/T 6183.1 M8	6
13	00002570	Bolt GB/T 16674 M10×60	8
14	00002572	Nut GB/T 6183.1 M10	8
15	10000703	Right extension rail	1
16	10002072	Lower extension rail	2
17	10002079	Extension deck weldment	1
18	10000333	Platform locking device assembly (refer to 305.1)	1
19	00002875	Bolt QC/T 340 M8×20	2
20	00000887	Circlips GB/T 893.1-47	2
21	00001295	Bearing GB/T 276-1994 - 6204	2
22	10002032	Roller	2
23	10000046	Slide pad	2
24	00000821	Screw GB/T 70.3 M5×12	8
25	10000307	Roller bracket	2
26	00001155	Screw GB/T 70.3 M8×55	8
27	10000376	Bumper	2

302.1 Platform Extension Assembly (JCPT0808HD/DC, JCPT1008HD/DC)

Item	Part No.	Description	Qty.
28	00000607	Screw GB/T 818 M5×12 - H	2

303.1 Main Platform Assembly (JCPT1012HD/DC, JCPT1212HD/DC, JCPT1412HD/DC, JCPT1612HD/DC, JCPT1614HD/DC)

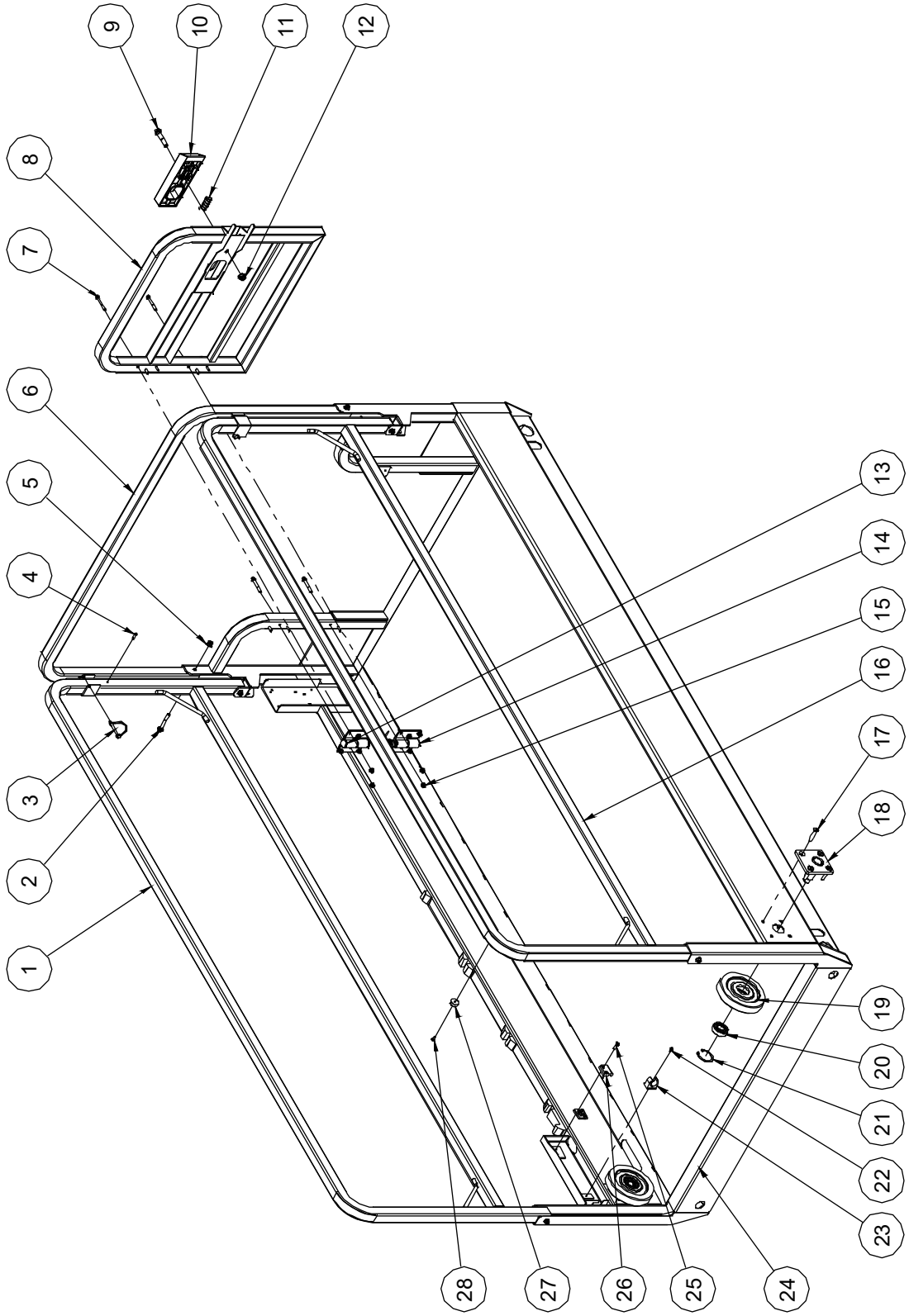

303.1 Main Platform Assembly (JCPT1012HD/DC, JCPT1212HD/DC, JCPT1412HD/DC, JCPT1612HD/DC, JCPT1614HD/DC)

Item	Part No.	Description	Qty.
1	10000377	Right main rail (JCPT1012HD/DC, JCPT1212HD/DC, JCPT1412HD/DC)	1
	10000891	Right main rail (JCPT1612HD/DC, JCPT1614HD/DC)	1
2	00002568	Bolt GB/T 16674 M8×60	6
3	10001178	Inserted pin	2
4	00001991	Rivet GB/T 12618.4 4.8×16	2
5	00002575	Nut GB/T 6183.1 M8	6
6	10000374	Rear rail	1
7	00002581	Bolt GB/T 16674 M6×50	12
8	10000368	Entry gate	1
9	00002547	Bolt GB/T 16674 M10×55	1
10	10000331	Latch handle	1
11	10000367	Spring	1
12	00002572	Nut GB/T 6183.1 M10	1
13	10000299	Hinge A	1
14	10000302	Hinge B	1
15	00002574	Nut GB/T 6183.1 M6	12
16	10000363	Left main rail (JCPT1012HD/DC, JCPT1212HD/DC, JCPT1412HD/DC)	1
	10000887	Left main rail (JCPT1612HD/DC, JCPT1614HD/DC)	1
17	00001154	Screw GB/T 70.3 M8×45	8
18	10000307	Roller bracket	2
19	10002031	Roller	2
20	00001295	Bearing GB/T 276-1994 - 6204	2
21	00000887	Circlips GB/T 893.1-47	2
22	00004385	Screw GB/T 823 M4×8	1
23	00001823	Clip 24	1
24	10002033	Main deck weldment (JCPT1012HD/DC, JCPT1212HD/DC, JCPT1412HD/DC)	1

303.1 Main Platform Assembly (JCPT1012HD/DC, JCPT1212HD/DC, JCPT1412HD/DC, JCPT1612HD/DC, JCPT1614HD/DC)

Item	Part No.	Description	Qty.
24	10002093	Main deck weldment (JCPT1612HD/DC, JCPT1614HD/DC)	1
25	00002064	Screw GB/T 70.1 M4×20	2
26	10001776	Wire clip	2
27	10000376	Bumper	1
28	00000607	Screw GB/T 818 M5×12 - H	1

304.1 Platform Extension Assembly (JCPT1012HD/DC, JCPT1212HD/DC, JCPT1412HD/DC, JCPT1612HD/DC, JCPT1614HD/DC)

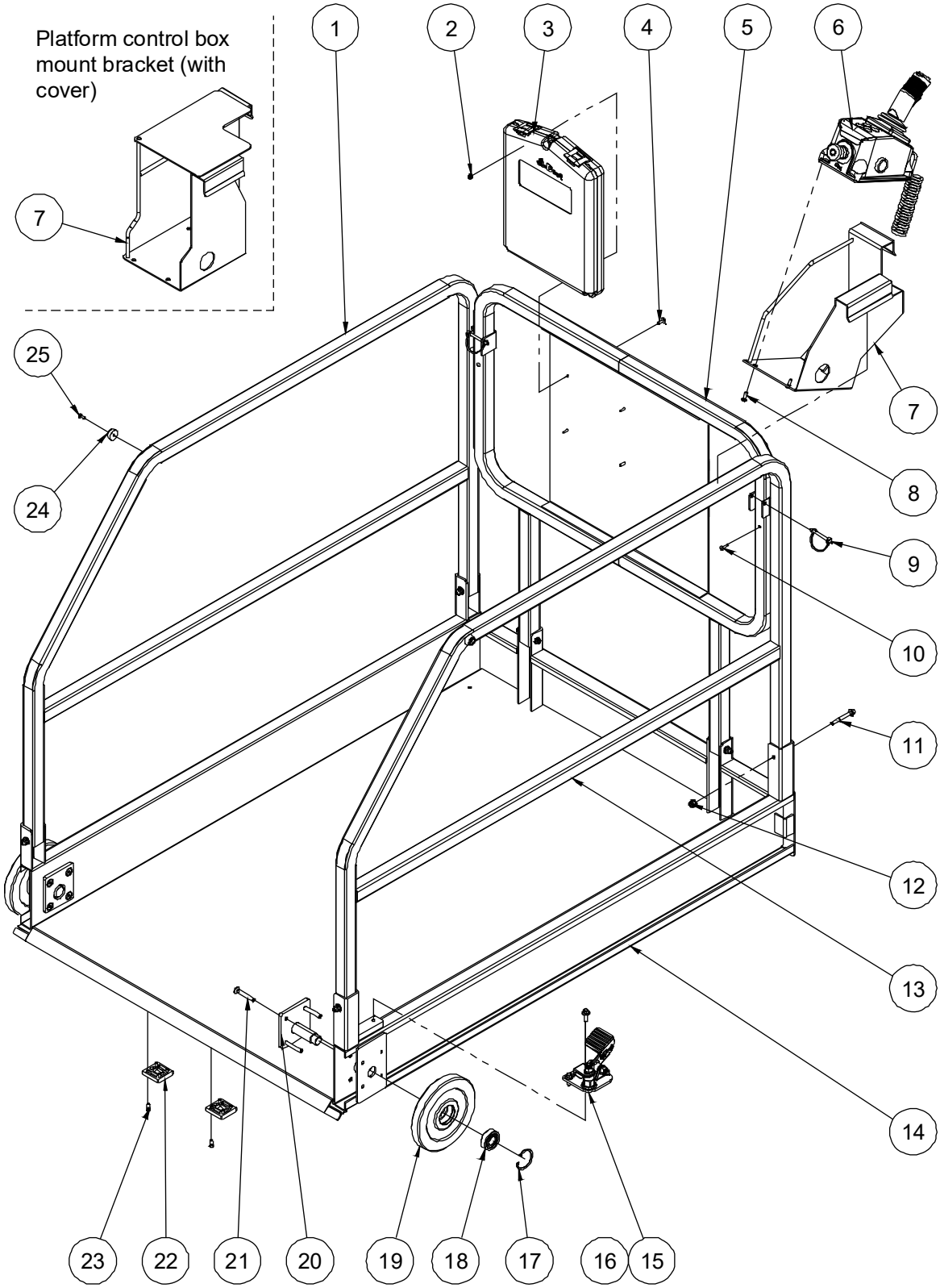

304.1 Platform Extension Assembly (JCPT1012HD/DC, JCPT1212HD/DC, JCPT1412HD/DC, JCPT1612HD/DC, JCPT1614HD/DC)

Item	Part No.	Description	Qty.
1	10000354	Left extension rail	1
2	00002573	Nut GB/T 6183.1 M5	4
3	50000555	Manual box	1
4	00002523	Screw GB/T 973 M5×16	4
5	10000357	Front rail	1
6	00000706	Platform control box assembly (refer to 306.1)	1
7	10000390	Platform control box mount bracket	1
	10001715	Platform control box mount bracket (with cover)	1
8	00001986	Screw GB/T 818 M6×16 - H	4
9	10001178	Inserted pin	2
10	00001991	Rivet GB/T 12618.4 4.8×16	2
11	00002568	Bolt GB/T 16674 M8×60	6
12	00002575	Nut GB/T 6183.1 M8	6
13	10000361	Right extension rail	1
14	10002044	Extension deck weldment	1
15	10000333	Platform locking device assembly (refer to 305.1)	1
16	00002875	Bolt QC/T 340 M8×20	2
17	00000887	Circlips GB/T 893.1-47	2
18	00001295	Bearing GB/T 276-1994 - 6204	2
19	10002032	Roller	2
20	10000307	Roller bracket	2
21	00001155	Screw GB/T 70.3 M8×55	8
22	10000046	Slide pad	2
23	00000822	Screw GB/T 70.3 M5×16	8
24	10000376	Bumper	2
25	00000607	Screw GB/T 818 M5×12 - H	2

305.1 Platform Locking Device Assembly

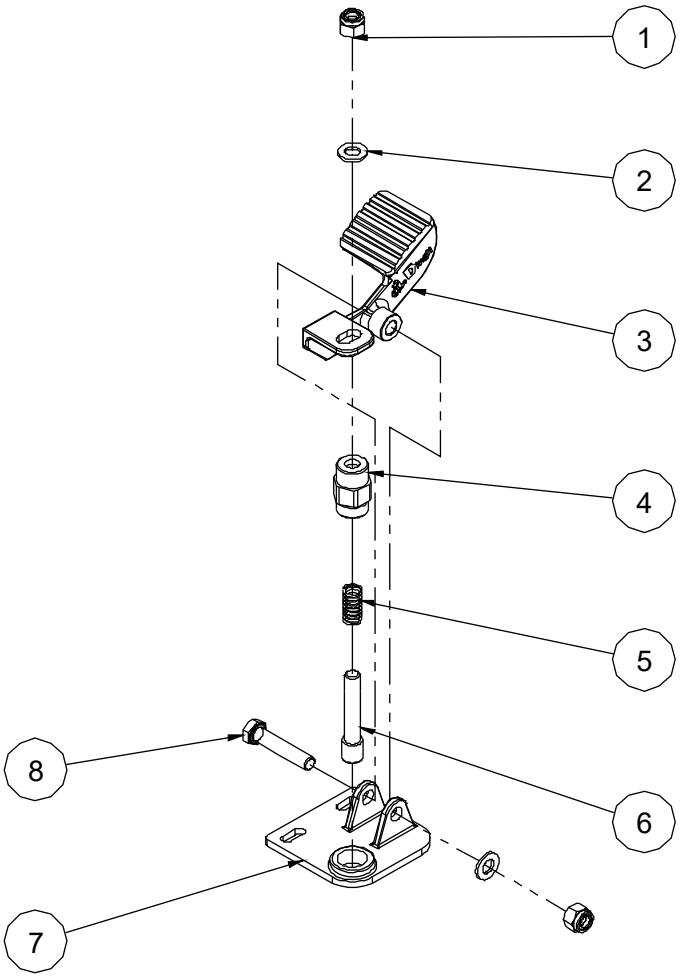

305.1 Platform Locking Device Assembly

Item	Part No.	Description	Qty.
1	00000623	Nut GB/T 6182 M10	2
2	00000615	Washer GB/T 97.1 10	2
3	10000334	Foot pedal	1
4	10000337	Lock pin housing	1
5	10000336	Spring	1
6	10000338	Lock pin	1
7	10000339	Bracket	1
8	00002030	Bolt GB/T 5782 M10×50	1

306.1 Platform Control Box Assembly

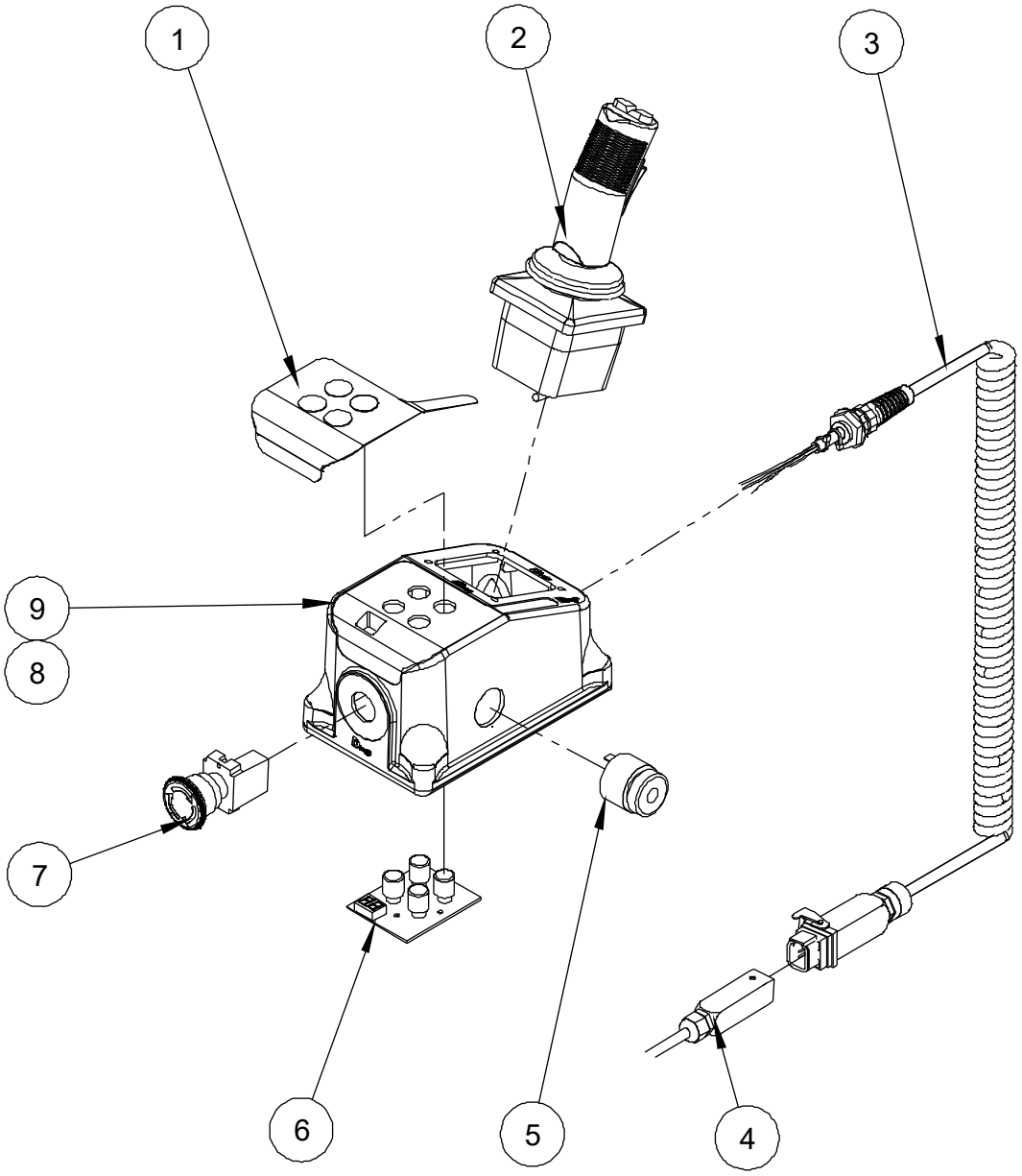

306.1 Platform Control Box Assembly

Item	Part No.	Description	Qty.
1	09140001	Decal, Platform control panel	1
2	00000711	Joystick	1
-	00003033	Function enable switch	1
-	00003034	Joystick cover	1
-	00003035	Joystick steer switch	1
-	00003036	Switch boot	1
3	00000714	Coil cord	1
-	00003037	Housing	1
-	00003039	Female insert	1
-	00003041	Male contacts	5
-	00003043	Cable gland	1
4	00002175	Platform control box harness (JCPT0808HD/DC)	1
	00002176	Platform control box harness (JCPT1008HD/DC)	1
	00002177	Platform control box harness (JCPT1012HD/DC)	1
	00002178	Platform control box harness (JCPT1212HD/DC)	1
	00002699	Platform control box harness (JCPT1412HD/DC)	1
	00002700	Platform control box harness (JCPT1612HD/DC, JCPT1614HD/DC)	1
-	00003042	Hood	1
-	00003040	Male insert	1
-	00003038	Female contacts	5
-	00003043	Cable gland	2
5	00000712	Alarm	1
-	00003044	Alarm nut	1
6	00000709	Main board	1
-	00000710	Button	4
7	00000713	Emergency stop switch	1
-	00003045	Red mushroom head	1
-	00003046	Base with 1 NC contact	1

306.1 Platform Control Box Assembly

Item	Part No.	Description	Qty.
8	00000708	Enclosure	1
9	00000707	Cover bottom	1

307.1 Protective Device Assembly (JCPT0808HD/DC, JCPT1008HD/DC) (Option)

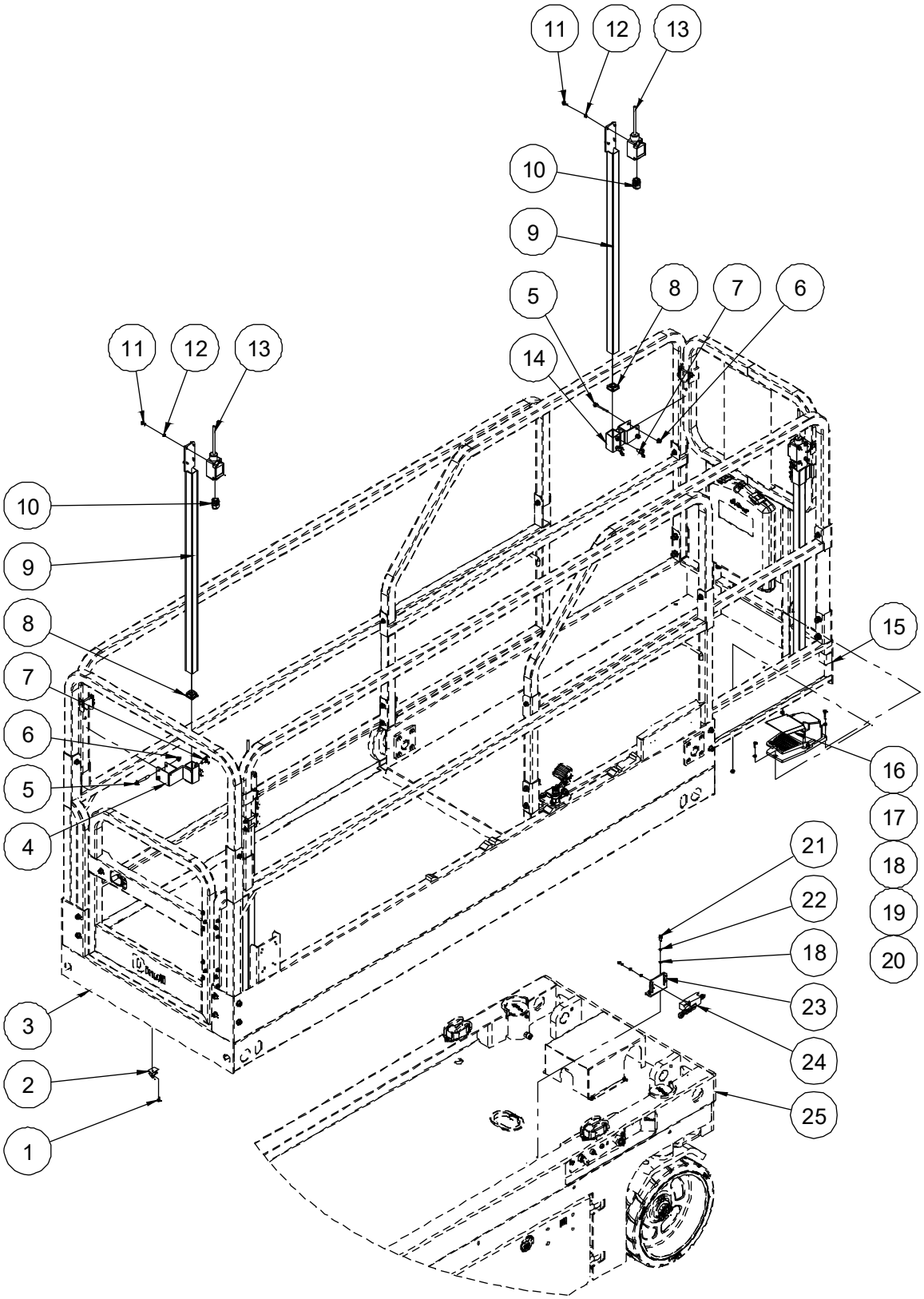

307.1 Protective Device Assembly (JCPT0808HD/DC, JCPT1008HD/DC) (Option)

Item	Part No.	Description	Qty.
1	00000607	Screw GB/T 818 M5×12 - H	1
2	00002758	Wire clip	1
3	10002211	Main deck weldment	1
4	10002137	Bracket	2
5	00002569	Bolt GB/T 16674 M6×55	8
6	00002574	Nut GB/T 6183.1 M6	8
7	00002586	Screw M8×16	8
8	10003413	Plug	4
9	10001704	Switch rod	4
10	00001827	Water-proof joint M18	4
11	00001060	Screw GB/T 818 M6×12 - H	16
12	00000621	Washer GB/T 93 6	16
13	00002606	Limit switch	4
14	10001745	Bracket	2
15	10002210	Extension deck weldment	1
16	00002613	Footswitch	1
17	00002484	Screw GB/T 70.1 M5×25	2
18	00000605	Washer GB/T 97.1 5	9
19	00001246	Screw GB/T 70.1 M5×16	1
20	00002573	Nut GB/T 6183.1 M5	3
21	00001252	Screw GB/T 70.1 M5×12	6
22	00000606	Washer GB/T 93 5	6
23	10001720	Switch bracket	1
24	00002354	Limit switch	1
25	10001767	Frame weldment	1

308.1 Protective Device Assembly (JCPT1012HD/DC, JCPT1212HD/DC, JCPT1412HD/DC, JCPT1612HD/DC) (Option)

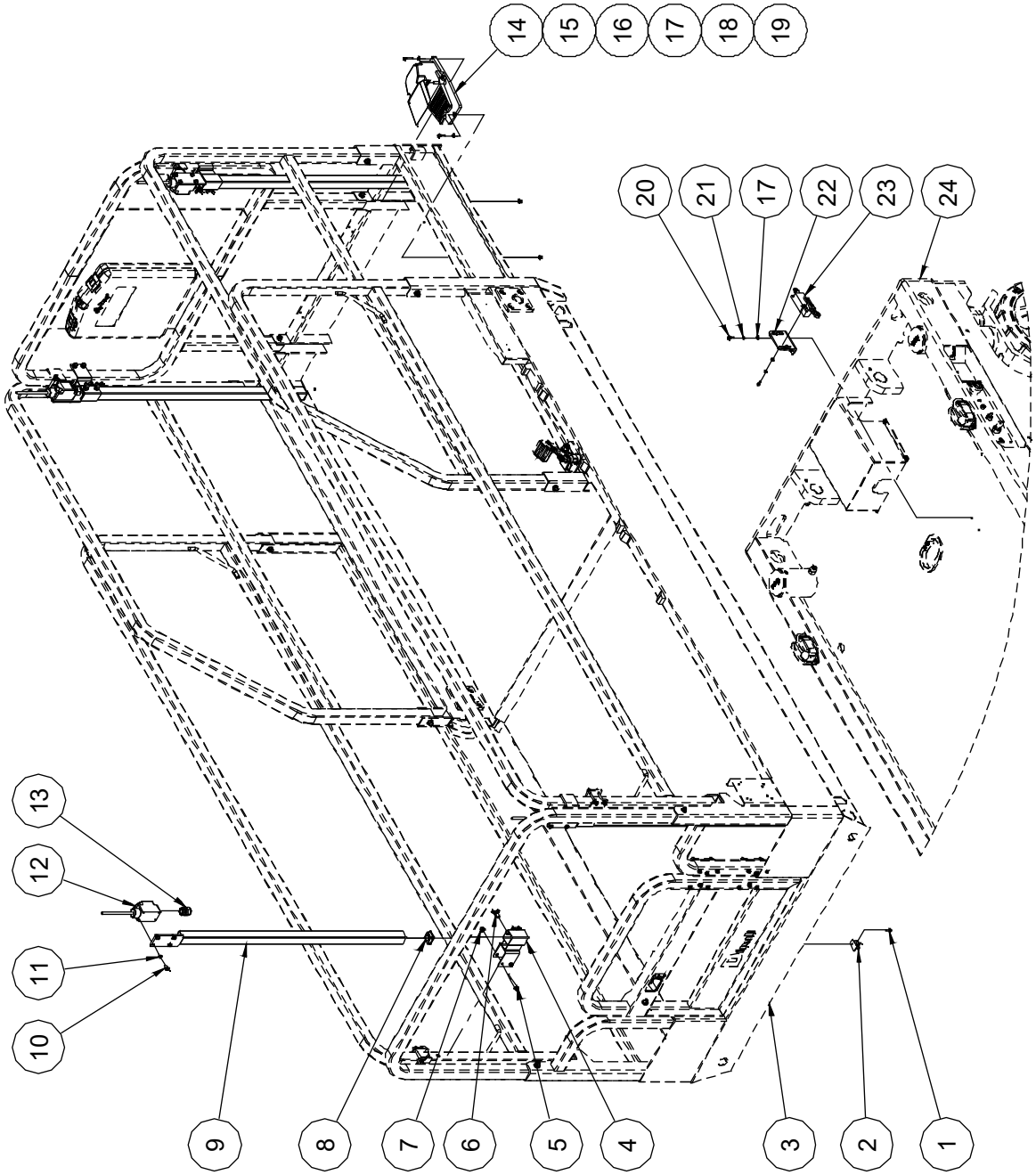

307.1 Protective Device Assembly (JCPT1012HD/DC, JCPT1212HD/DC, JCPT1412HD/DC, JCPT1612HD/DC) (Option)

Item	Part No.	Description	Qty.
1	00000607	Screw GB/T 818 M5×12 - H	1
2	00002758	Wire clip	1
3	10002205	Main deck weldment (JCPT1012HD/DC, JCPT1212HD/DC, JCPT1412HD/DC)	1
	10004985	Main deck weldment (JCPT1612HD/DC)	1
4	10001745	Bracket	4
5	00002569	Bolt GB/T 16674 M6×55	8
6	00002586	Screw M8×16	8
7	00002574	Nut GB/T 6183.1 M6	8
8	10003413	Plug	4
9	10001704	Switch rod	4
10	00001060	Screw GB/T 818 M6×12 - H	16
11	00000621	Washer GB/T 93 6	16
12	00002606	Limit switch	4
13	00001827	Water-proof joint M18	4
14	00002613	Footswitch	1
15	00002484	Screw GB/T 70.1 M5×25	2
16	00001246	Screw GB/T 70.1 M5×16	1
17	00000605	Washer GB/T 97.1 5	9
18	10002206	Extension deck weldment	1
19	00002573	Nut GB/T 6183.1 M5	7
20	00001252	Screw GB/T 70.1 M5×12	6
21	00000606	Washer GB/T 93 5	6
22	10001720	Switch bracket	1
23	00002354	Limit switch	1
24	10001757	Frame weldment (JCPT1012HD/DC, JCPT1212HD/DC)	1
	10001763	Frame weldment (JCPT1412HD/DC)	1
	10004982	Frame weldment (JCPT1612HD/DC)	1

Section 4
Hydraulic System

401.1 Lower Lift Cylinder Assembly

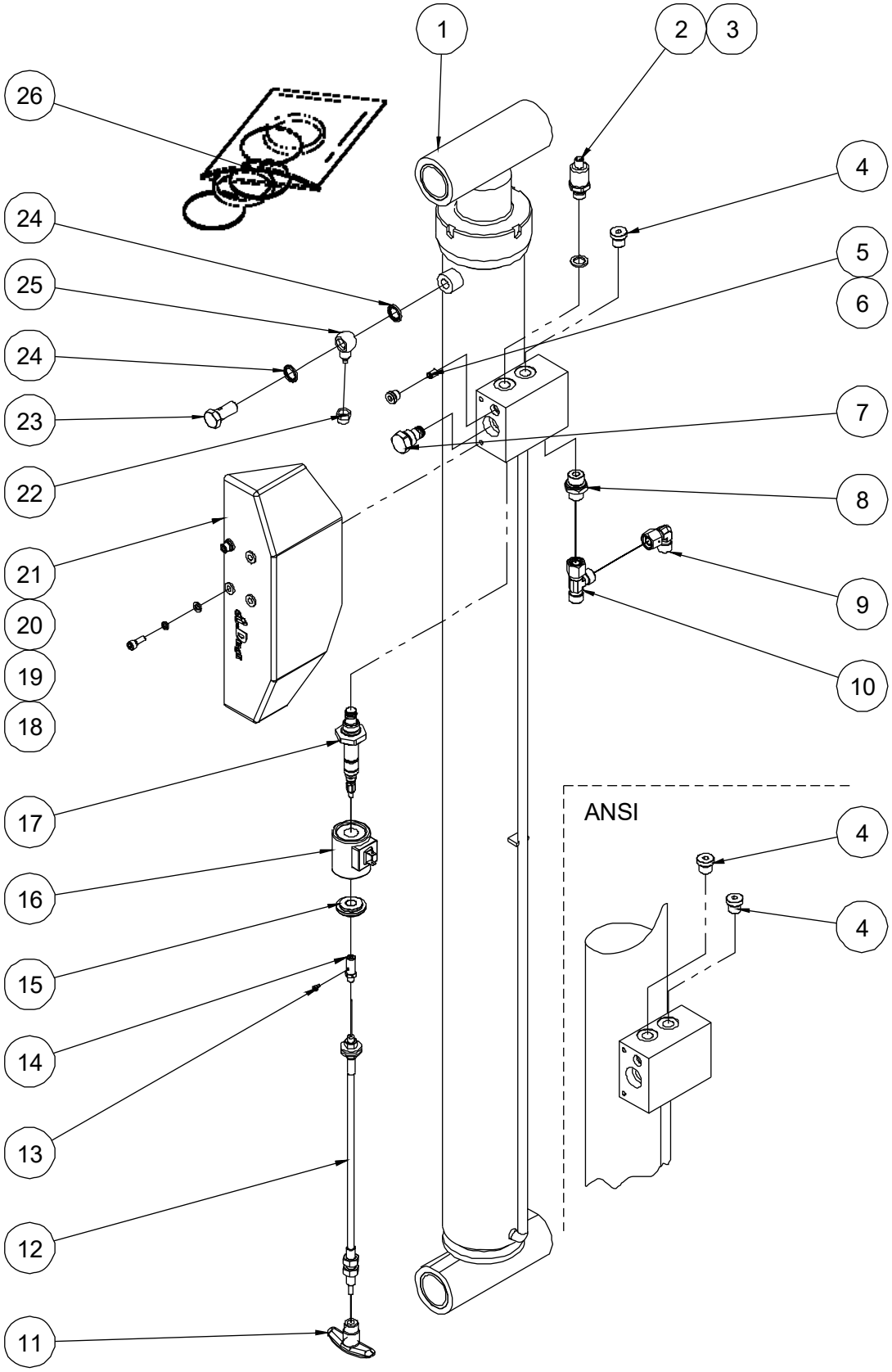

401.1 Lower Lift Cylinder Assembly

Item	Part No.	Description	Qty.
1	10000441	Lower lift cylinder (JCPT0808HD/DC, JCPT1008HD/DC, JCPT1012HD/DC, JCPT1212HD/DC, JCPT1412HD/DC)	1
	10000080	Lower lift cylinder (JCPT1612HD/DC, JCPT1614HD/DC)	1
2	00002418	Pressure sensor (All CE models)	1
3	00002518	Washer JB/T 982 13 (All CE models)	1
4	00001073	Plug VSTI14×1.5ED (All CE models)	1
	00001073	Plug VSTI14×1.5ED (All ANSI models)	2
5	00003027	Orifice Φ1.5 (JCPT0808HD/DC, JCPT1008HD/DC, JCPT1012HD/DC, JCPT1212HD/DC, JCPT1412HD/DC)	1
	00003000	Orifice Φ1.0 (JCPT1612HD/DC, JCPT1614HD/DC)	1
6	00002998	Plug SAE4	1
7	10000404	Check valve	1
8	00001292	Straight fitting	1
9	00001833	Elbow (JCPT1212HD/DC, JCPT1412HD/DC, JCPT1612HD/DC, JCPT1614HD/DC)	1
10	00001238	Tee fitting (JCPT1212HD/DC, JCPT1412HD/DC, JCPT1612HD/DC, JCPT1614HD/DC)	1
11	10000410	Lowering knob JB/T7274.6 BM5×70	1
12	10001177	Emergency down cable assembly (JCPT0808HD/DC, JCPT1008HD/DC, JCPT1012HD/DC, JCPT1212HD/DC, JCPT1412HD/DC)	1
	10001157	Emergency down cable assembly (JCPT1612HD/DC, JCPT1614HD/DC)	1
13	00002001	Screw GB/T 70.1 M3×5	1
14	10000413	Cable connector	1
15	00003020	Nut	1
16	00003019	Coil	1
17	00003022	Solenoid valve spool	1
18	00000876	Screw GB/T 70.1 M6×16	2
19	00000621	Washer GB/T 93 6	2
20	00000620	Washer GB/T 97.1 6	2
21	10000431	Valve cover	1

401.1 Lower Lift Cylinder Assembly

Item	Part No.	Description	Qty.
22	10000462	Nut	1
23	10000464	Fitting	1
24	00002519	Washer BS/A 13.74	2
25	10000465	Fitting	1
26	00003026	Seal kit 7563	1

402.1 Upper Lift Cylinder Assembly (JCPT1212HD/DC, JCPT1412HD/DC, JCPT1612HD/DC, JCPT1614HD/DC)

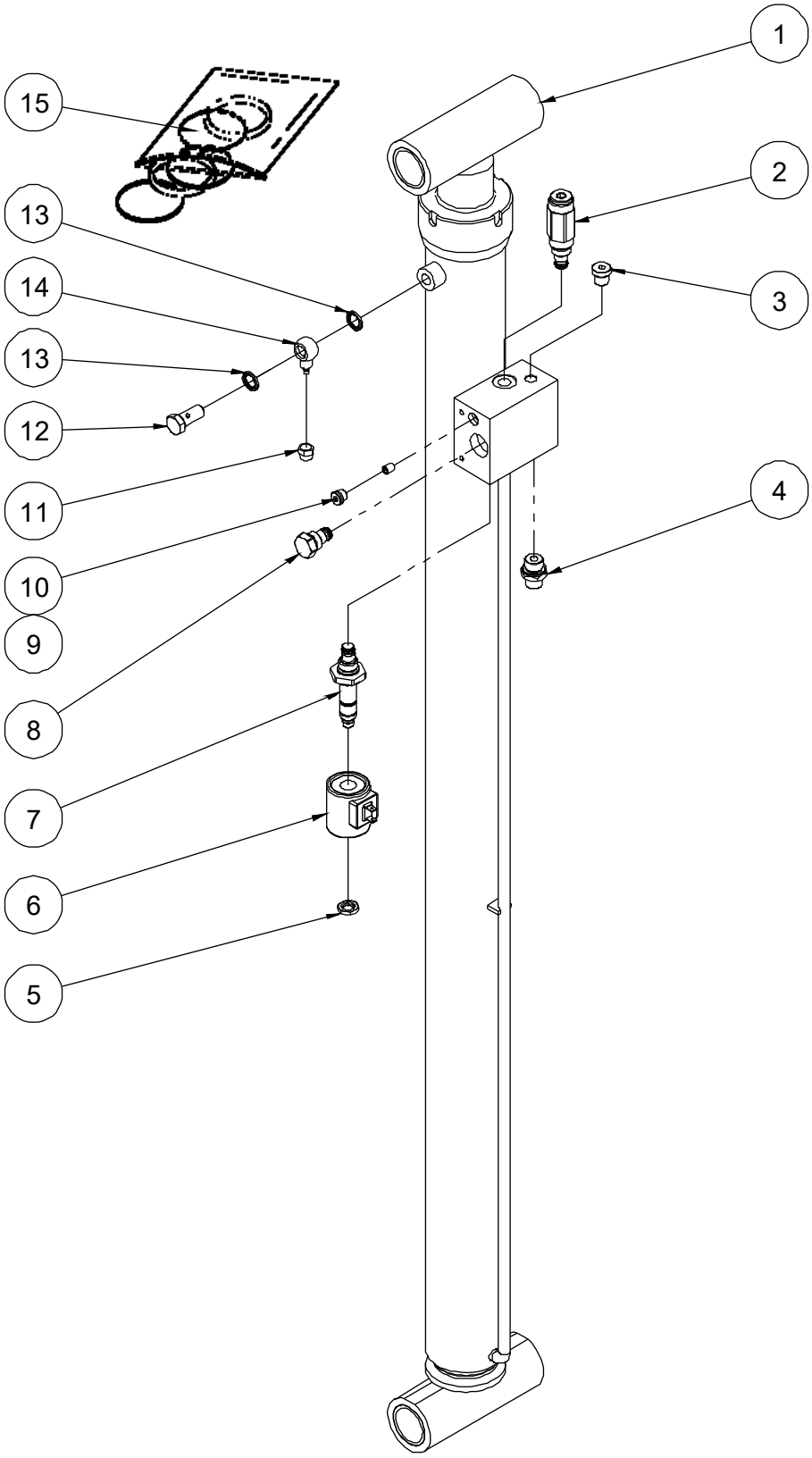

402.1 Upper Lift Cylinder Assembly (JCPT1212HD/DC, JCPT1412HD/DC, JCPT1612HD/DC, JCPT1614HD/DC)

Item	Part No.	Description	Qty.
1	10000448	Upper lift cylinder (JCPT1212HD/DC, JCPT1412HD/DC)	1
	10000089	Upper lift cylinder (JCPT1612HD/DC, JCPT1614HD/DC)	1
2	10000086	Relief valve	1
3	00001073	Plug VSTI14×1.5ED	1
4	00001292	Straight fitting	1
5	00003017	Nut	1
6	00003019	Coil	1
7	00003024	Solenoid valve spool	1
8	10000404	Check valve	1
9	00003000	Orifice Φ1.0 (JCPT1212HD/DC, JCPT1412HD/DC)	1
	00003028	Orifice Φ0.7 (JCPT1612HD/DC, JCPT1614HD/DC)	1
10	00002998	Plug SAE4	1
11	10000462	Nut	1
12	10000464	Fitting	1
13	00002519	Washer BS/A 13.74	2
14	10000465	Fitting	1
15	00003025	Seal kit 6356	1

403.1 Function manifold (Hydraulic Motor Drive)

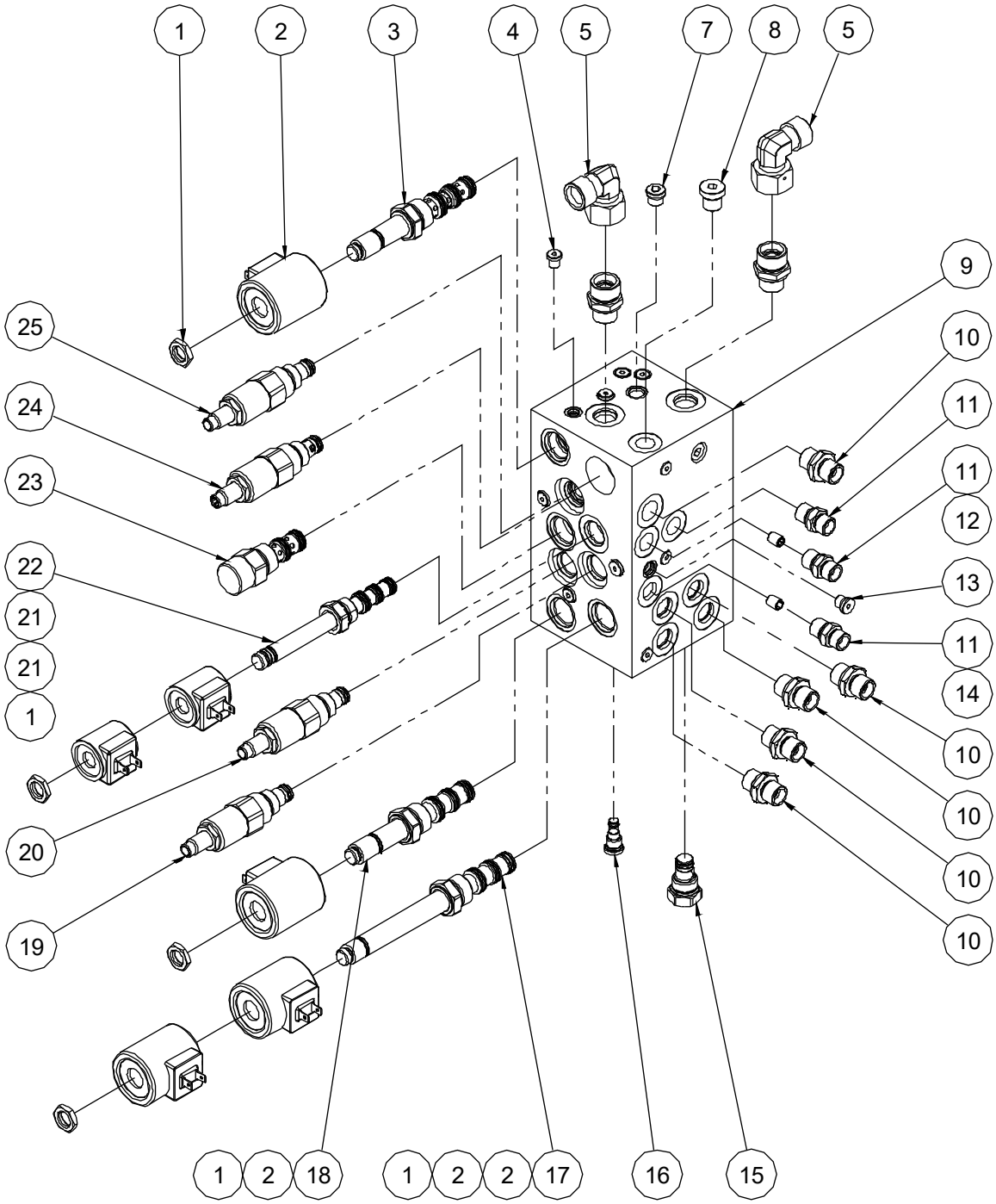

403.1 Function manifold (Hydraulic Motor Drive)

Item	Part No.	Description	Qty.
1	00003017	Nut	4
2	00003019	Coil	4
3	00003003	Solenoid valve spool	1
4	00002999	Plug SAE2	21
5	00001835	Elbow	2
6	00001264	Straight fitting	2
7	00002998	Plug SAE4	2
8	00001073	Plug VSTI14×1.5ED	1
9	00003016	Valve body	1
10	00001291	Straight fitting	5
11	00001282	Straight fitting	3
12	00003000	Orifice Φ1.0	2
13	00002997	Plug SAE3	2
14	00003014	Orifice Φ1.1	1
15	10000404	Check valve	2
16	00003013	Check valve	1
17	00003011	Solenoid valve spool	1
18	00003010	Solenoid valve spool	1
19	00003008	Relief valve	1
20	00003009	Relief valve	1
21	00003018	Coil	2
22	00003004	Solenoid valve spool	1
23	00003012	Flow control valve	1
24	00003001	Relief valve	1
25	00003007	Relief valve	1

404.1 Function manifold (Electric Motor Drive)

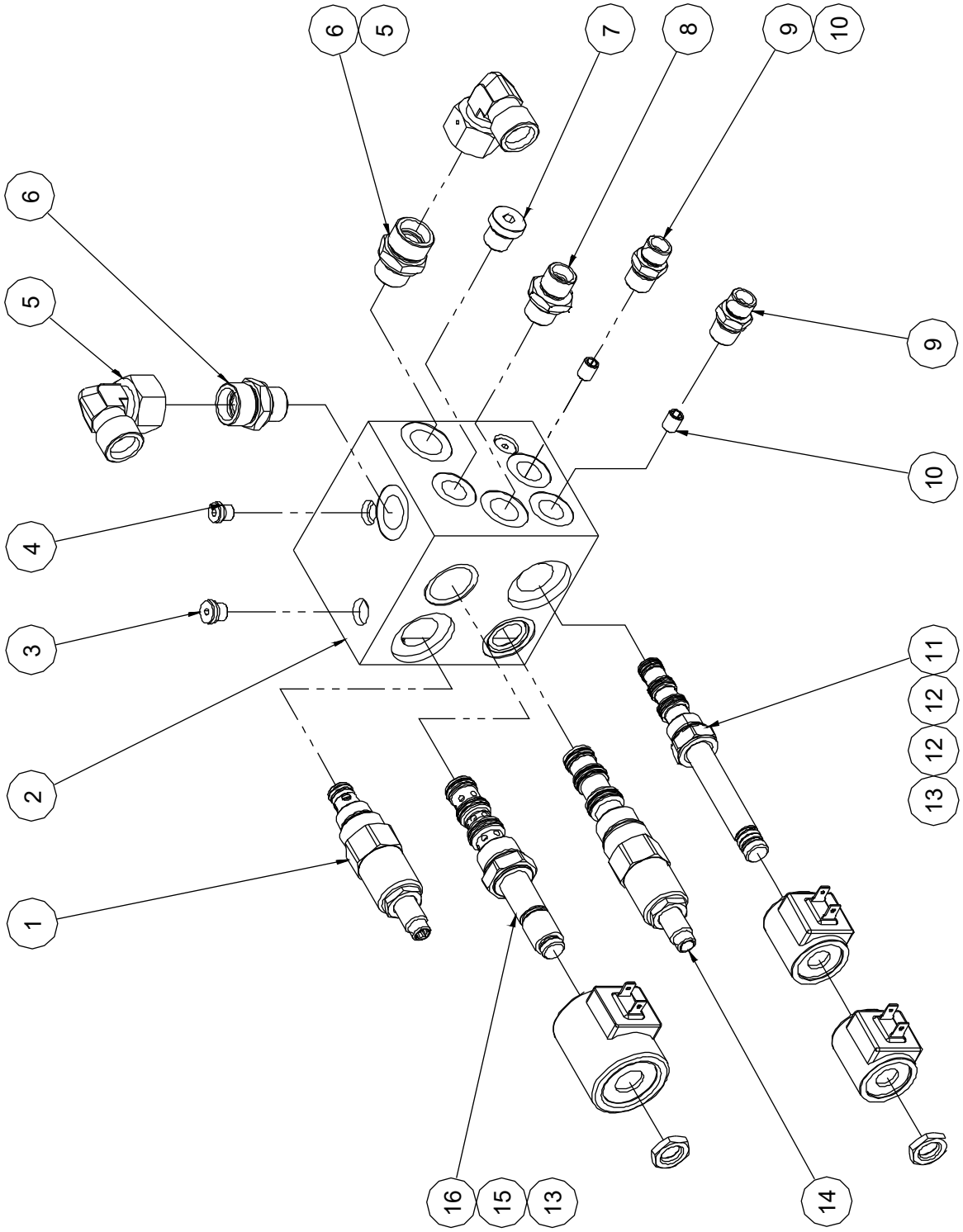

404.1 Function manifold (Electric Motor Drive)

Item	Part No.	Description	Qty.
1	00003001	Relief valve	1
2	00000531	Valve body	1
3	00002997	Plug SAE3	3
4	00002999	Plug SAE2	9
5	00001835	Elbow	2
6	00001264	Straight fitting	2
7	00001073	Plug VSTI14×1.5ED	1
8	00001291	Straight fitting	1
9	00001282	Straight fitting	2
10	00003000	Orifice Φ1.0	2
11	00003004	Solenoid valve spool	1
12	00003018	Coil	2
13	00003017	Nut	2
14	00003002	Steer priority flow control	1
15	00003019	Coil	1
16	00003003	Solenoid valve spool	1

405.1 Hydraulic Hoses and Fittings (JCPT0808HD, JCPT1008HD, JCPT1012HD)

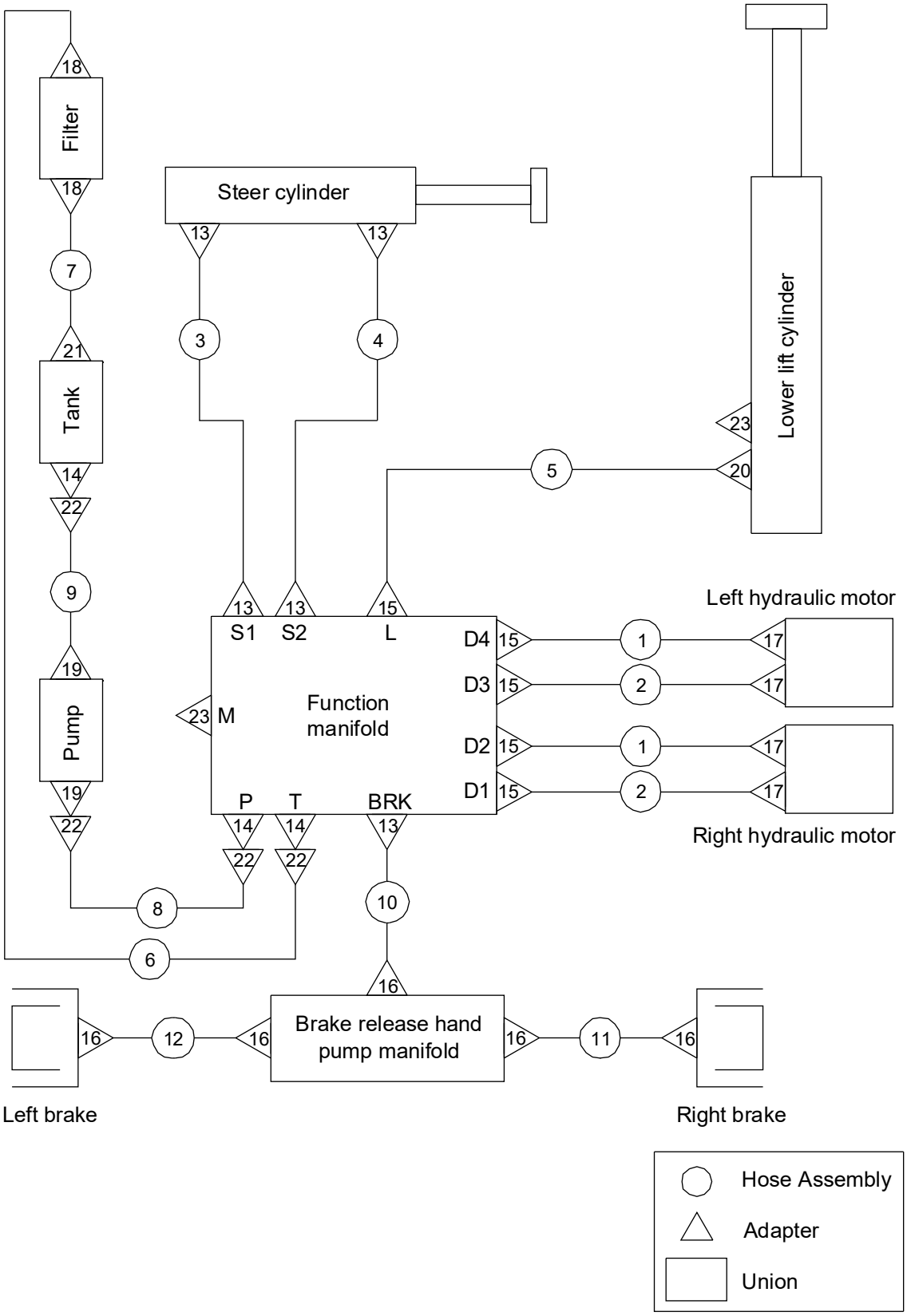

405.1 Hydraulic Hoses and Fittings (JCPT0808HD, JCPT1008HD, JCPT1012HD)

Item	Part No.	Description	Qty.
1	00002278	Hose assembly (JCPT0808HD, JCPT1008HD)	2
	00002187	Hose assembly (JCPT1012HD)	2
2	00002279	Hose assembly (JCPT0808HD, JCPT1008HD)	2
	00002188	Hose assembly (JCPT1012HD)	2
3	00002280	Hose assembly (JCPT0808HD, JCPT1008HD)	1
	00002189	Hose assembly (JCPT1012HD)	1
4	00002281	Hose assembly (JCPT0808HD, JCPT1008HD)	1
	00002190	Hose assembly (JCPT1012HD)	1
5	00002192	Hose assembly	1
6	00002193	Hose assembly	1
7	00002194	Hose assembly	1
8	00002195	Hose assembly	1
9	00002196	Hose assembly	1
10	00002282	Hose assembly (JCPT0808HD, JCPT1008HD)	1
	00002197	Hose assembly (JCPT1012HD)	1
11	00002284	Hose assembly (JCPT0808HD, JCPT1008HD)	1
	00002198	Hose assembly (JCPT1012HD)	1
12	00002283	Hose assembly (JCPT0808HD, JCPT1008HD)	1
	00002199	Hose assembly (JCPT1012HD)	1
13	00001282	Straight fitting	5
14	00001264	Straight fitting	3
15	00001291	Straight fitting	5
16	00001769	Straight fitting	5
17	00001771	Straight fitting	4
18	00001508	Straight fitting	2
19	00001776	Straight fitting	2
20	00001292	Straight fitting	1
21	10000466	Fitting	1

405.1 Hydraulic Hoses and Fittings (JCPT0808HD, JCPT1008HD, JCPT1012HD)

Item	Part No.	Description	Qty.
22	00001835	Elbow	4
23	00001073	Plug VSTI14×1.5ED	2

406.1 Hydraulic Hoses and Fittings (JCPT0808DC, JCPT1008DC, JCPT1012DC)

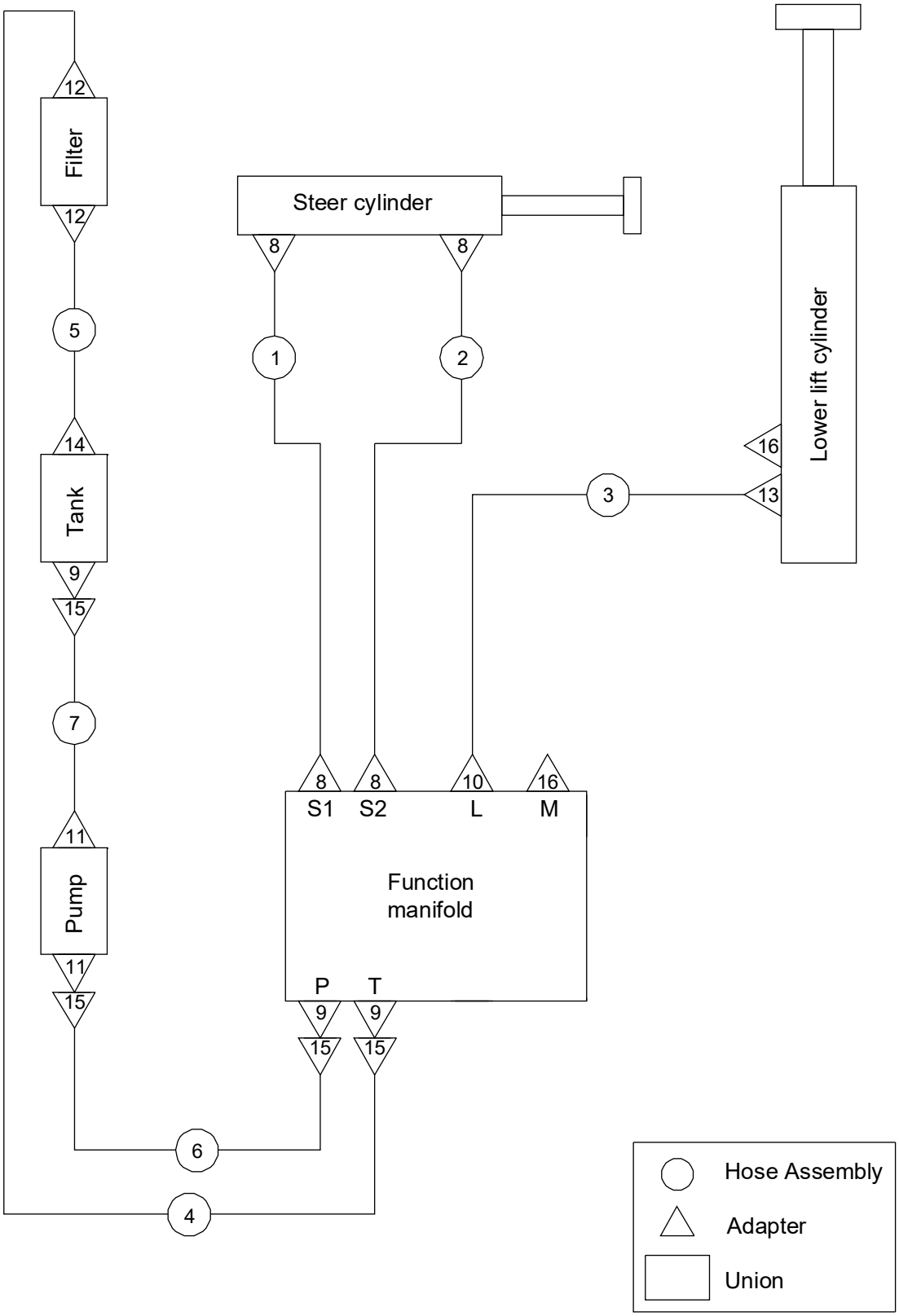

406.1 Hydraulic Hoses and Fittings (JCPT0808DC, JCPT1008DC, JCPT1012DC)

Item	Part No.	Description	Qty.
1	00002280	Hose assembly (JCPT0808DC, JCPT1008DC)	1
	00002189	Hose assembly (JCPT1012DC)	1
2	00002281	Hose assembly (JCPT0808DC, JCPT1008DC)	1
	00002190	Hose assembly (JCPT1012DC)	1
3	00002192	Hose assembly	1
4	00002276	Hose assembly	1
5	00002194	Hose assembly	1
6	00002277	Hose assembly	1
7	00002196	Hose assembly	1
8	00001282	Straight fitting	4
9	00001264	Straight fitting	3
10	00001291	Straight fitting	1
11	00001776	Straight fitting	2
12	00001508	Straight fitting	2
13	00001292	Straight fitting	1
14	10000466	Fitting	1
15	00001835	Elbow	4
16	00001073	Plug VSTI14×1.5ED	2

407.1 Hydraulic Hoses and Fittings (JCPT1212HD, JCPT1412HD)

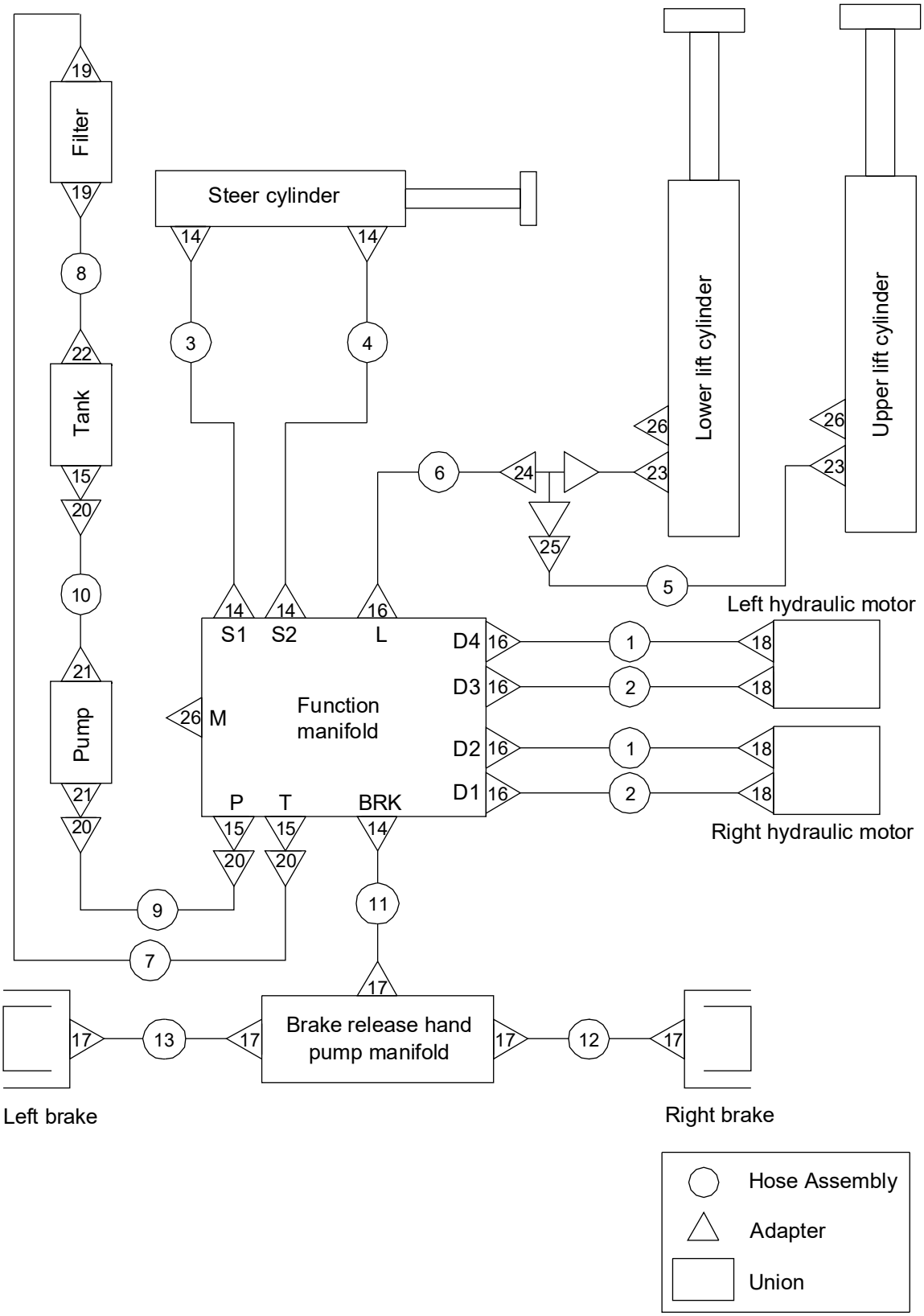

407.1 Hydraulic Hoses and Fittings (JCPT1212HD, JCPT1412HD)

Item	Part No.	Description	Qty.
1	00002187	Hose assembly	2
2	00002188	Hose assembly	2
3	00002189	Hose assembly	1
4	00002190	Hose assembly	1
5	00002191	Hose assembly	1
6	00002192	Hose assembly	1
7	00002193	Hose assembly	1
8	00002194	Hose assembly	1
9	00002195	Hose assembly	1
10	00002196	Hose assembly	1
11	00002197	Hose assembly	1
12	00002198	Hose assembly	1
13	00002199	Hose assembly	1
14	00001282	Straight fitting	5
15	00001264	Straight fitting	3
16	00001291	Straight fitting	5
17	00001769	Straight fitting	5
18	00001771	Straight fitting	4
19	00001508	Straight fitting	2
20	00001835	Elbow	4
21	00001776	Straight fitting	2
22	10000466	Fitting	1
23	00001292	Straight fitting	2
24	00001238	Tee fitting	1
25	00001833	Elbow	1
26	00001073	Plug VSTI14×1.5ED	3

408.1 Hydraulic Hoses and Fittings (JCPT1212DC, JCPT1412DC)

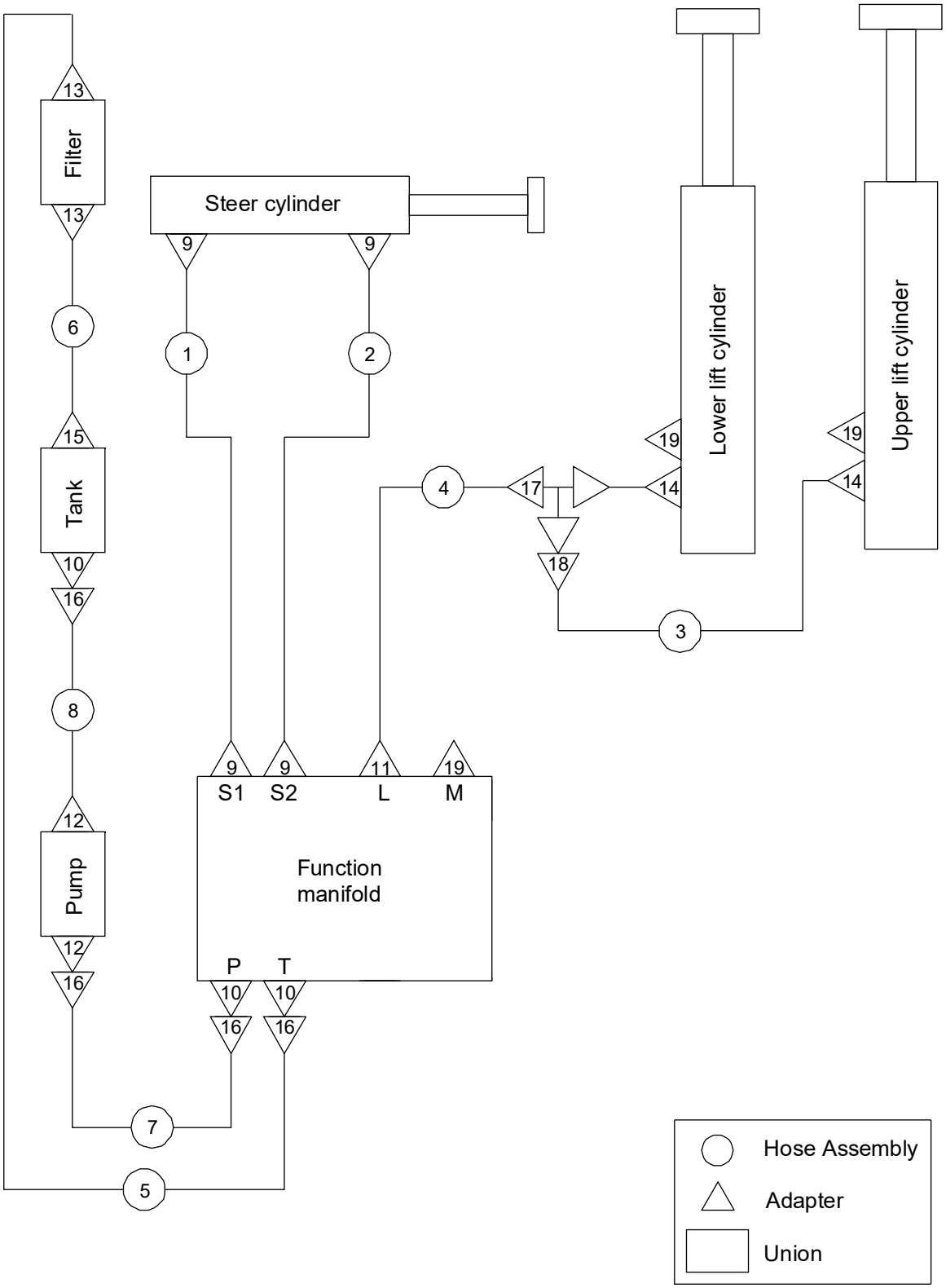

408.1 Hydraulic Hoses and Fittings (JCPT1212DC, JCPT1412DC)

Item	Part No.	Description	Qty.
1	00002189	Hose assembly	1
2	00002190	Hose assembly	1
3	00002191	Hose assembly	1
4	00002192	Hose assembly	1
5	00002276	Hose assembly	1
6	00002194	Hose assembly	1
7	00002277	Hose assembly	1
8	00002196	Hose assembly	1
9	00001282	Straight fitting	4
10	00001264	Straight fitting	3
11	00001291	Straight fitting	1
12	00001776	Straight fitting	2
13	00001508	Straight fitting	2
14	00001292	Straight fitting	2
15	10000466	Fitting	1
16	00001835	Elbow	4
17	00001833	Elbow	1
18	00001238	Tee fitting	1
19	00001073	Plug VSTI14×1.5ED	3

409.1 Hydraulic Hoses and Fittings (JCPT1612HD, JCPT1614HD)

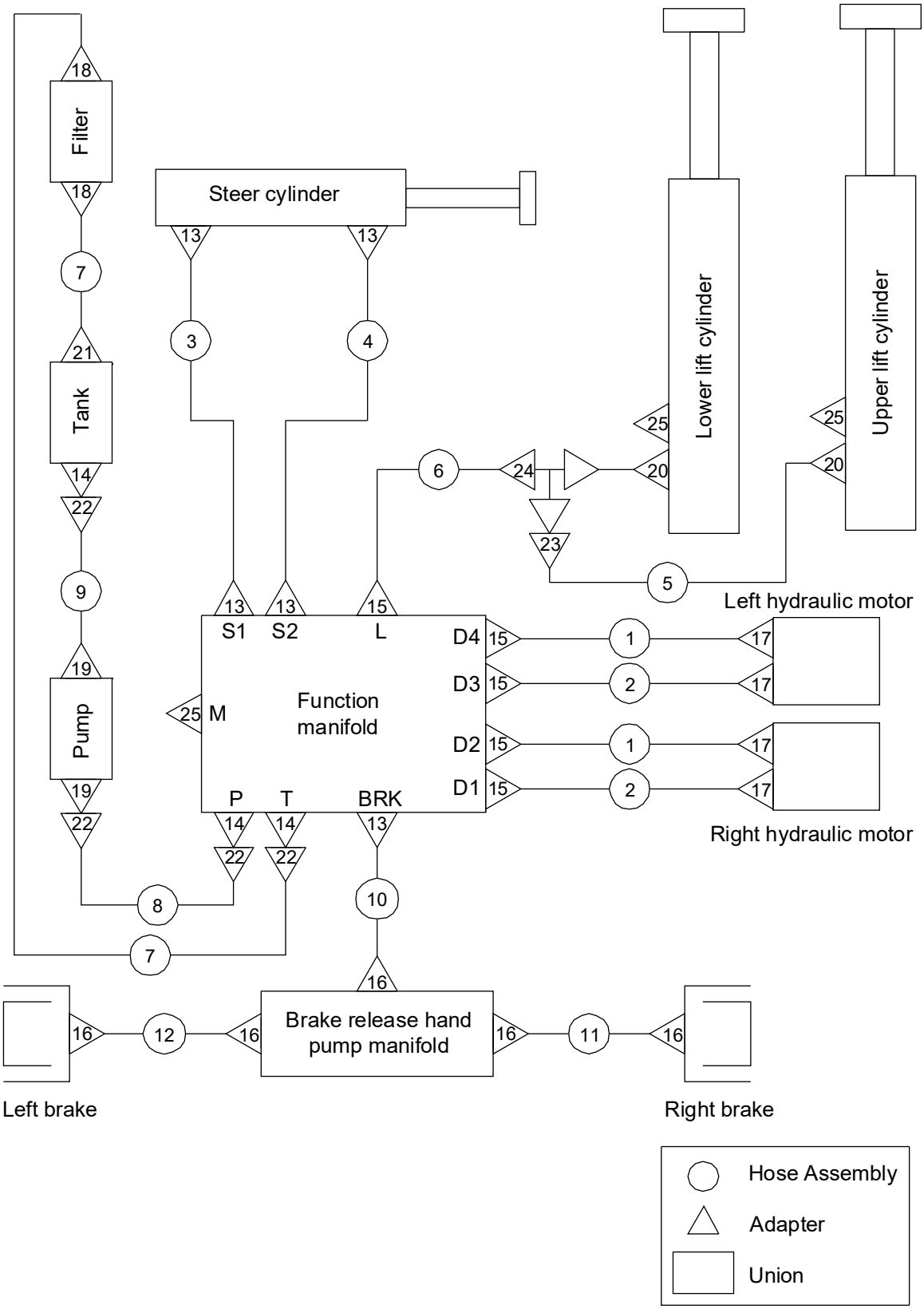

409.1 Hydraulic Hoses and Fittings (JCPT1612HD, JCPT1614HD)

Item	Part No.	Description	Qty.
1	00002292	Hose assembly	2
2	00002293	Hose assembly	2
3	00002288	Hose assembly	1
4	00002287	Hose assembly	1
5	00002286	Hose assembly	1
6	00002285	Hose assembly	1
7	00002194	Hose assembly	2
8	00002277	Hose assembly	1
9	00002196	Hose assembly	1
10	00002289	Hose assembly	1
11	00002291	Hose assembly	1
12	00002290	Hose assembly	1
13	00001282	Straight fitting	5
14	00001264	Straight fitting	3
15	00001291	Straight fitting	5
16	00001769	Straight fitting	5
17	00001771	Straight fitting	4
18	00001508	Straight fitting	2
19	00001776	Straight fitting	2
20	00001292	Straight fitting	2
21	10000466	Fitting	1
22	00001835	Elbow	4
23	00001833	Elbow	1
24	00001238	Tee fitting	1
25	00001073	Plug VSTI14×1.5ED	3

410.1 Hydraulic Hoses and Fittings (JCPT1612DC, JCPT1614DC)

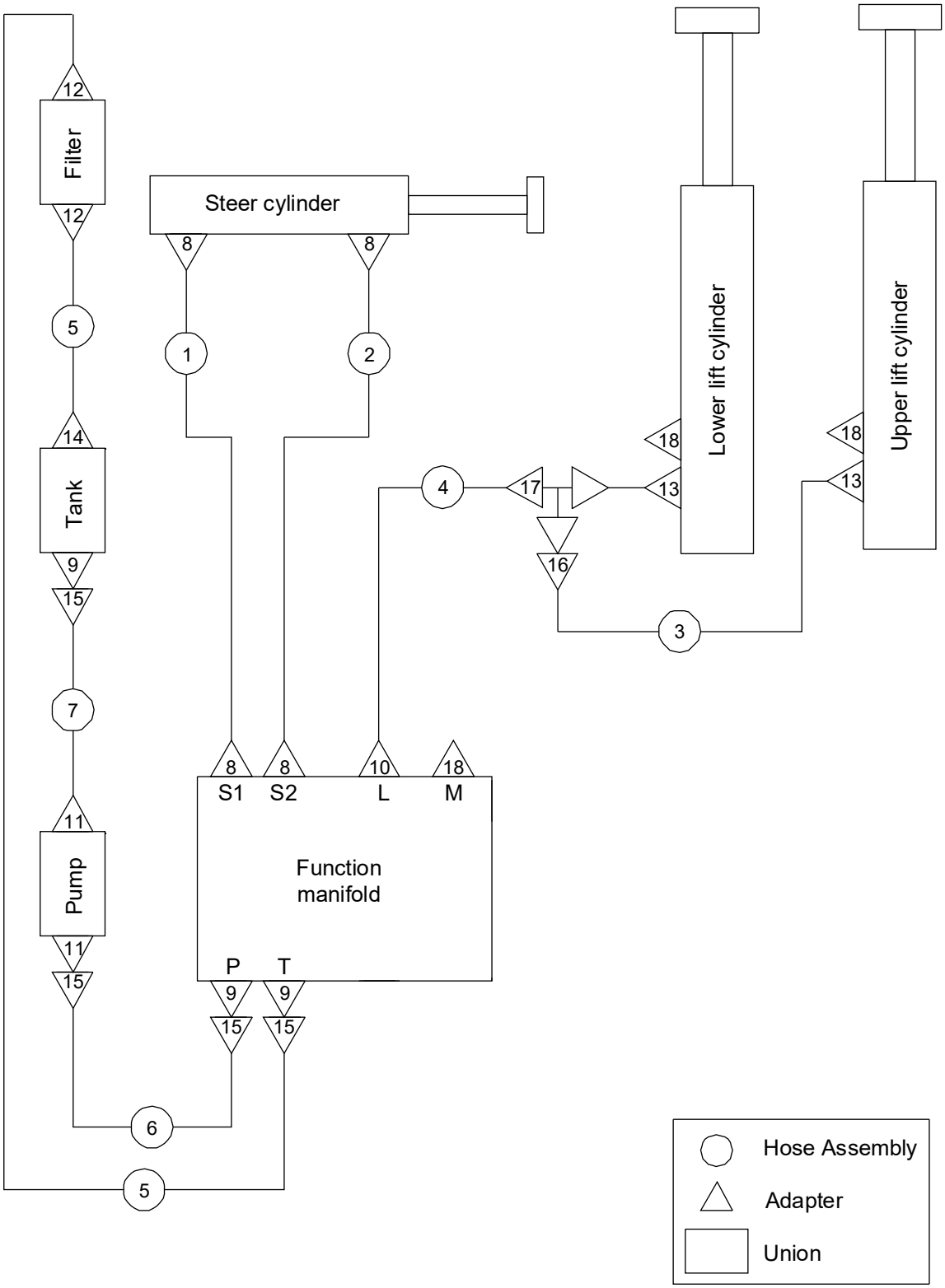

410.1 Hydraulic Hoses and Fittings (JCPT1612DC, JCPT1614DC)

Item	Part No.	Description	Qty.
1	00002288	Hose assembly (JCPT1612DC)	1
	00002295	Hose assembly (JCPT1614DC)	1
2	00002287	Hose assembly (JCPT1612DC)	1
	00002294	Hose assembly (JCPT1614DC)	1
3	00002286	Hose assembly	1
4	00002285	Hose assembly	1
5	00002194	Hose assembly	2
6	00002277	Hose assembly	1
7	00002196	Hose assembly	1
8	00001282	Straight fitting	4
9	00001264	Straight fitting	3
10	00001291	Straight fitting	1
11	00001776	Straight fitting	2
12	00001508	Straight fitting	2
13	00001292	Straight fitting	2
14	10000466	Fitting	1
15	00001835	Elbow	4
16	00001833	Elbow	1
17	00001238	Tee fitting	1
18	00001073	Plug VSTI14×1.5ED	3

Section 5
Electrical System

501.1 Electrical Harness (JCPT0808HD, JCPT1008HD, JCPT1012HD)

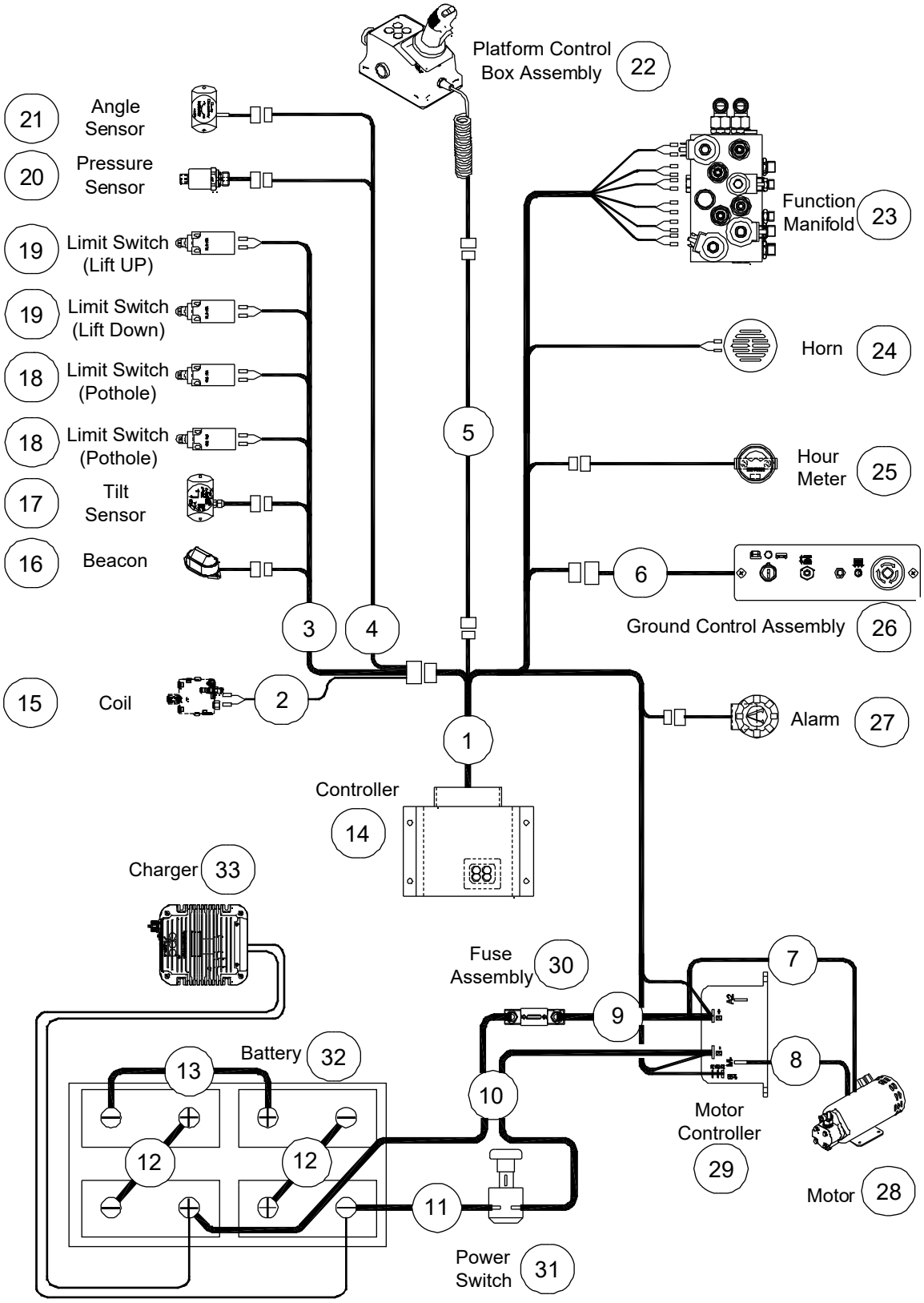

501.1 Electrical Harness (JCPT0808HD, JCPT1008HD, JCPT1012HD)

Item	Part No.	Description	Qty.
1	00002168	ECU harness	1
2	00003377	Lowering valve	1
3	00002173	Limit switch harness (JCPT0808HD, JCPT1008HD)	1
	00002174	Limit switch harness (JCPT1012HD)	1
4	00002179	Angle & pressure sensors harness	1
5	00002175	Platform control box harness (JCPT0808HD)	1
	00002176	Platform control box harness (JCPT1008HD)	1
	00002177	Platform control box harness (JCPT1012HD)	1
6	00002169	Ground control panel harness	1
7	00002171	Pump motor positive harness	1
8	00002172	Pump motor negative harness	1
9	00002170	Motor controller harness	1
10	00002166	Battery positive harness (JCPT0808HD, JCPT1008HD)	1
	00002167	Battery positive harness (JCPT1012HD)	1
11	00002165	Battery negative harness	1
12	00002163	Battery harness 1	2
13	00002164	Battery harness 2	1
14		Controller (refer to 105.1)	1
15		Coil (refer to 401.1)	1
16		Beacon (refer to 113.1)	1
17		Tilt sensor (refer to 113.1)	1
18		Limitl switch, pothole (refer to 103.1)	2
19		Limit switch, lift up/down (refer to 113.1)	2
20		Pressure sensor (refer to 401.1)	1
21		Angle sensor (refer to 201.1, 202.1, 203.1, 204.1)	1
22		Platform control box assembly (refer to 306.1)	1
23		Function manifold (refer to 403.1)	1
24		Horn (refer to 105.1)	1

501.1 Electrical Harness (JCPT0808HD, JCPT1008HD, JCPT1012HD)

Item	Part No.	Description	Qty.
25		Hour meter (refer to 105.1)	1
26		Ground control assembly (refer to 113.1)	1
27		Alarm (refer to 105.1)	1
28		Motor (refer to 107.1)	1
29		Motor controller (refer to 105.1)	1
30		Fuse assembly (refer to 105.1)	1
31		Power switch (refer to 104.1)	1
32		Battery (refer to 104.1)	4
33		Charger (refer to 104.1)	1

502.1 Electrical Harness (JCPT0808DC, JCPT1008DC, JCPT1012DC)

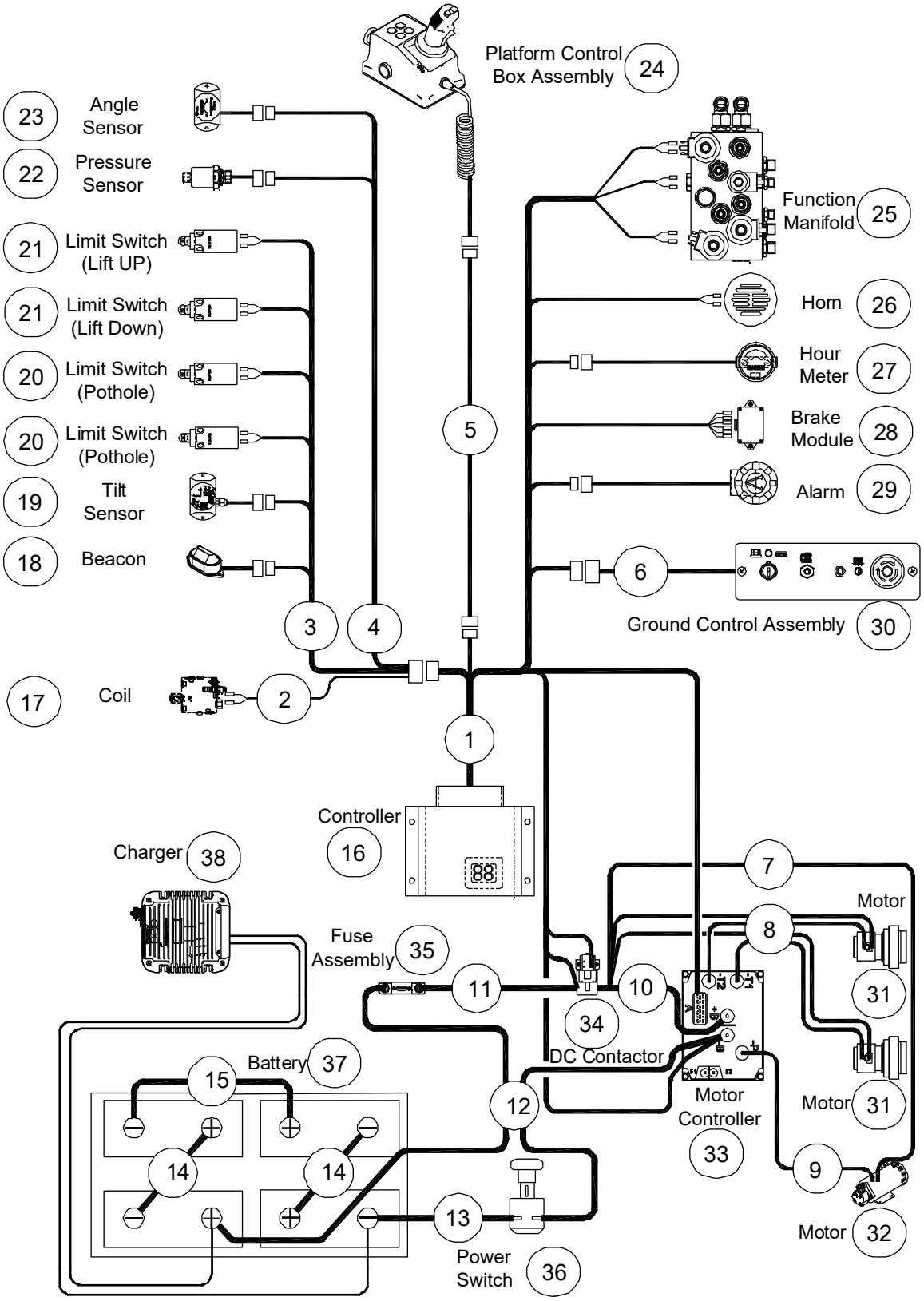

502.1 Electrical Harness (JCPT0808DC, JCPT1008DC, JCPT1012DC)

Item	Part No.	Description	Qty.
1	00002668	ECU harness	1
2	00003377	Lowering valve	1
3	00002173	Limit switch harness (JCPT0808DC, JCPT1008DC)	1
	00002174	Limit switch harness (JCPT1012DC)	1
4	00002179	Angle & pressure sensors harness	1
5	00002175	Platform control box harness (JCPT0808DC)	1
	00002176	Platform control box harness (JCPT1008DC)	1
	00002177	Platform control box harness (JCPT1012DC)	1
6	00002169	Ground control panel harness	1
7	00002679	Pump motor positive harness	1
8	00002689	Drive motor harness (JCPT0808DC, JCPT1008DC)	1
	00002690	Drive motor harness (JCPT1012DC)	1
9	00002683	Pump motor negative harness	1
10	00002674	Motor controller harness	1
11	00002706	DC contactor harness	1
12	00002661	Battery positive harness (JCPT0808DC, JCPT1008DC)	1
	00002662	Battery positive harness (JCPT1012DC)	1
13	00002165	Battery negative harness	1
14	00002163	Battery harness 1	2
15	00002164	Battery harness 2	1
16		Controller (refer to 106.1)	1
17		Coil (refer to 401.1)	1
18		Beacon (refer to 113.1)	1
19		Tilt sensor (refer to 113.1)	1
20		Limitl switch, pothole (refer to 103.1)	2
21		Limit switch, lift up/down (refer to 113.1)	2
22		Pressure sensor (refer to 401.1)	1
23		Angle sensor (refer to 201.1, 202.1, 203.1, 204.1)	1

502.1 Electrical Harness (JCPT0808DC, JCPT1008DC, JCPT1012DC)

Item	Part No.	Description	Qty.
24		Platform control box assembly (refer to 306.1)	1
25		Function manifold (refer to 404.1)	1
26		Horn (refer to 106.1)	1
27		Hour meter (refer to 106.1)	1
28		Brake module (refer to 108.1)	1
29		Alarm (refer to 106.1)	1
30		Ground control assembly (refer to 113.1)	1
31		Motor (refer to 102.1)	2
32		Motor (refer to 107.1)	1
33		Motor controller (refer to 108.1)	1
34		DC Contactor (refer to 108.1)	1
35		Fuse assembly (refer to 108.1)	1
36		Power switch (refer to 104.1)	1
37		Battery (refer to 104.1)	4
38		Charger (refer to 104.1)	1

503.1 Electrical Harness (JCPT1212HD)

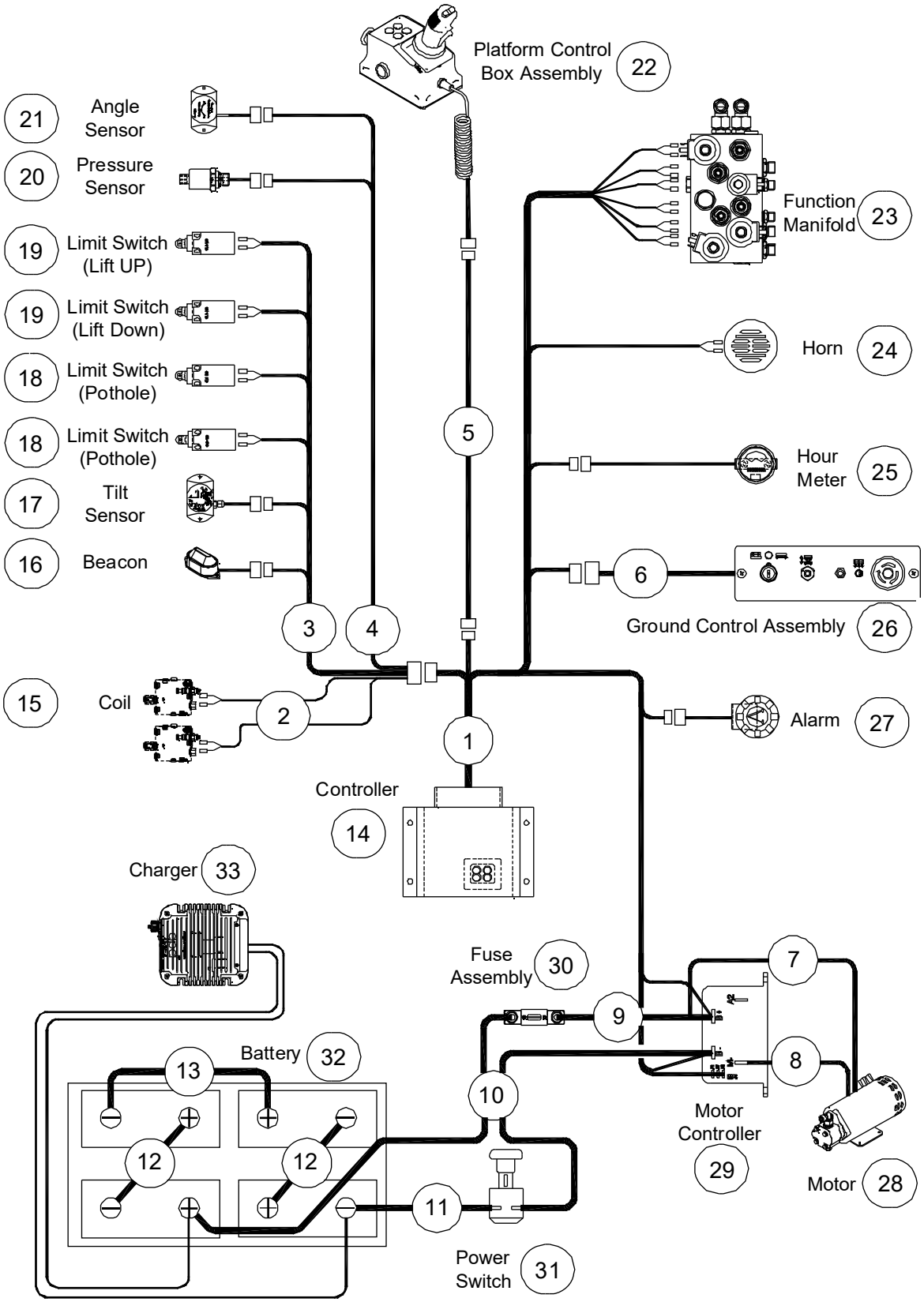

503.1 Electrical Harness (JCPT1212HD)

Item	Part No.	Description	Qty.
1	00002168	ECU harness	1
2	00003378	Lowering valve	1
3	00002174	Limit switch harness	1
4	00002179	Angle & pressure sensors harness	1
5	00002178	Platform control box harness	1
6	00002169	Ground control panel harness	1
7	00002171	Pump motor positive harness	1
8	00002172	Pump motor negative harness	1
9	00002170	Motor controller harness	1
8	00002167	Battery positive harness	1
11	00002165	Battery negative harness	1
12	00002163	Battery harness 1	2
13	00002164	Battery harness 2	1
14		Controller (refer to 105.1)	1
15		Coil (refer to 401.1, 402.1)	2
16		Beacon (refer to 113.1)	1
17		Tilt sensor (refer to 113.1)	1
18		Limitl switch, pothole (refer to 103.1)	2
19		Limit switch, lift up/down (refer to 113.1)	2
20		Pressure sensor (refer to 401.1)	1
21		Angle sensor (refer to 201.1, 202.1, 203.1, 204.1)	1
22		Platform control box assembly (refer to 306.1)	1
23		Function manifold (refer to 403.1)	1
24		Horn (refer to 105.1)	1
25		Hour meter (refer to 105.1)	1
26		Ground control assembly (refer to 113.1)	1
27		Alarm (refer to 105.1)	1
28		Motor (refer to 107.1)	1
29		Motor controller (refer to 105.1)	1

503.1 Electrical Harness (JCPT1212HD)

Item	Part No.	Description	Qty.
30		Fuse assembly (refer to 105.1)	1
31		Power switch (refer to 104.1)	1
32		Battery (refer to 104.1)	4
33		Charger (refer to 104.1)	1

504.1 Electrical Harness (JCPT1212DC)

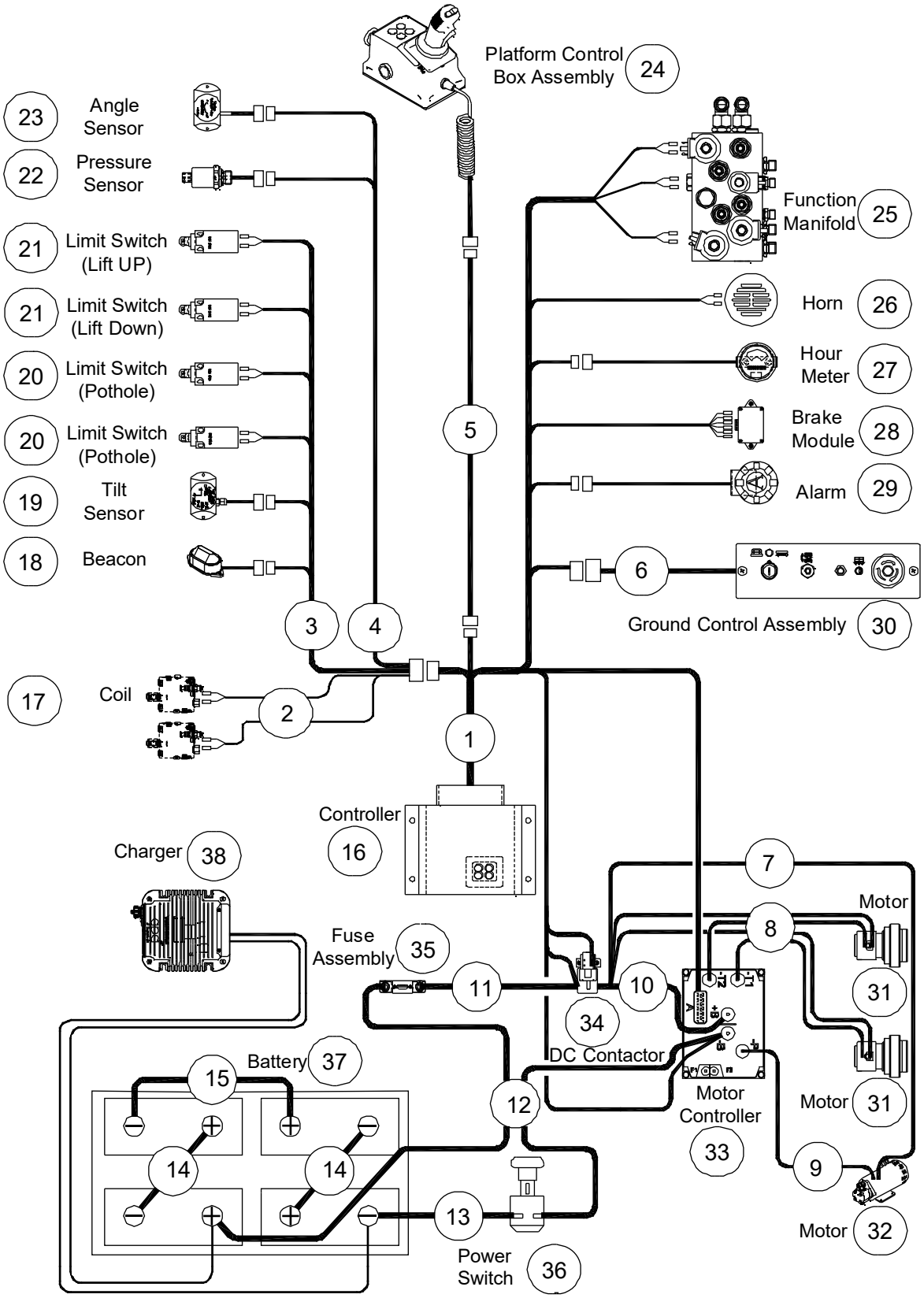

504.1 Electrical Harness (JCPT1212DC)

Item	Part No.	Description	Qty.
1	00002668	ECU harness	1
2	00003378	Lowering valve	1
3	00002174	Limit switch harness	1
4	00002179	Angle & pressure sensors harness	1
5	00002178	Platform control box harness	1
6	00002169	Ground control panel harness	1
7	00002679	Pump motor positive harness	1
8	00002690	Drive motor harness	1
9	00002683	Pump motor negative harness	1
10	00002674	Motor controller harness	1
11	00002706	DC contactor harness	1
12	00002662	Battery positive harness	1
13	00002165	Battery negative harness	1
14	00002163	Battery harness 1	2
15	00002164	Battery harness 2	1
16		Controller (refer to 106.1)	1
17		Coil (refer to 401.1, 402.1)	2
18		Beacon (refer to 113.1)	1
19		Tilt sensor (refer to 113.1)	1
20		Limitl switch, pothole (refer to 103.1)	2
21		Limit switch, lift up/down (refer to 113.1)	2
22		Pressure sensor (refer to 401.1)	1
23		Angle sensor (refer to 201.1, 202.1, 203.1, 204.1)	1
24		Platform control box assembly (refer to 306.1)	1
25		Function manifold (refer to 404.1)	1
26		Horn (refer to 106.1)	1
27		Hour meter (refer to 106.1)	1
28		Brake module (refer to 108.1)	1
29		Alarm (refer to 106.1)	1

504.1 Electrical Harness (JCPT1212DC)

Item	Part No.	Description	Qty.
30		Ground control assembly (refer to 113.1)	1
31		Motor (refer to 102.1)	2
32		Motor (refer to 107.1)	1
33		Motor controller (refer to 108.1)	1
34		DC Contactor (refer to 108.1)	1
35		Fuse assembly (refer to 108.1)	1
36		Power switch (refer to 104.1)	1
37		Battery (refer to 104.1)	4
38		Charger (refer to 104.1)	1

505.1 Electrical Harness (JCPT1412HD, JCPT1612HD, JCPT1614HD)

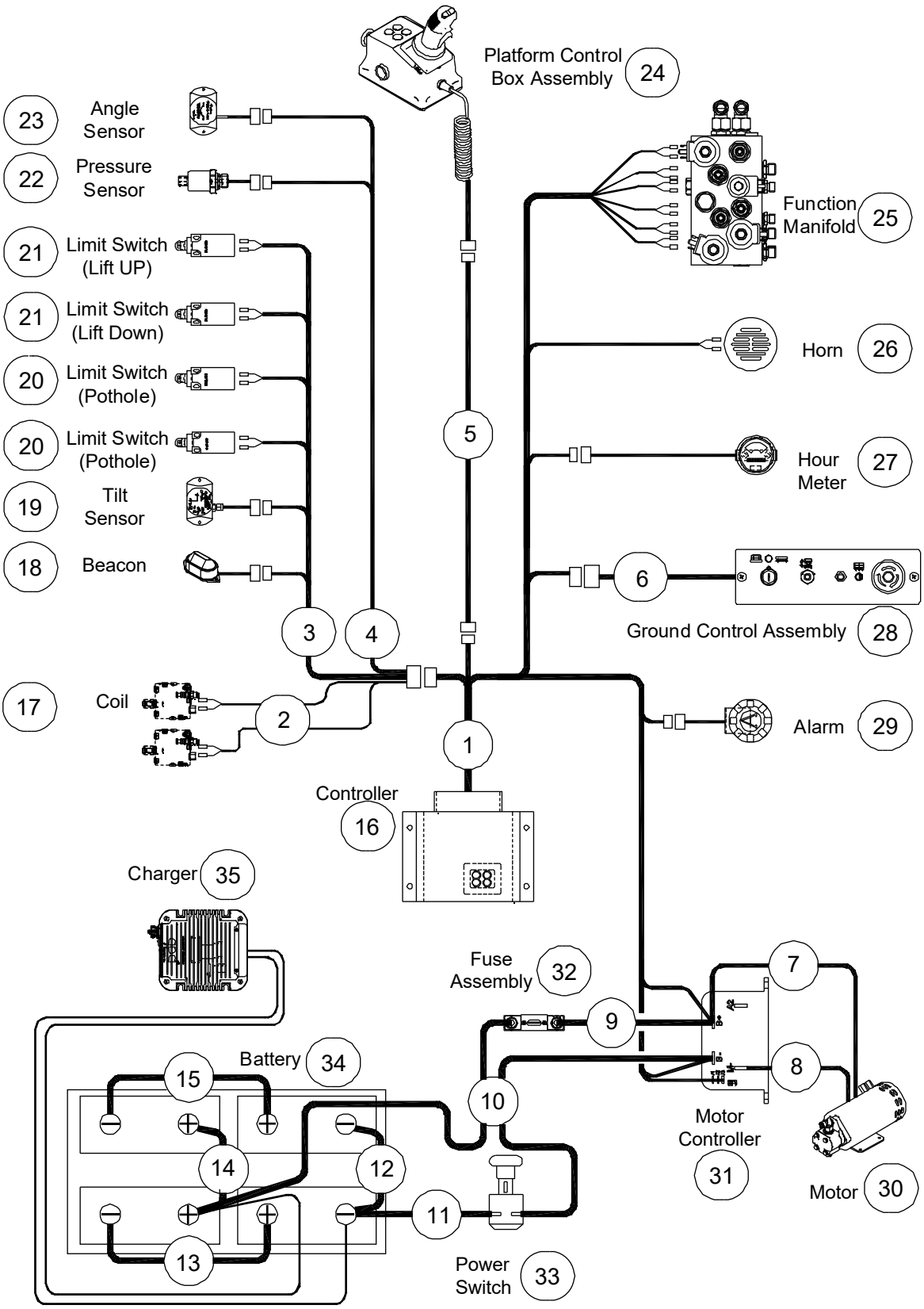

505.1 Electrical Harness (JCPT1412HD, JCPT1612HD, JCPT1614HD)

Item	Part No.	Description	Qty.
1	00002168	ECU harness	1
2	00003378	Lowering valve (JCPT1412HD	1
	00003379	Lowering valve (JCPT1612HD, JCPT1614HD)	1
3	00002174	Limit switch harness (JCPT1412HD)	1
	00002693	Limit switch harness (JCPT1612HD, JCPT1614HD)	1
4	00002179	Angle & pressure sensors harness(JCPT1412HD)	1
	00002701	Angle & pressure sensors harness (JCPT1612HD, JCPT1614HD)	1
5	00002699	Platform control box harness (JCPT1412HD)	1
	00002700	Platform control box harness(JCPT1612HD,JCPT1614HD)	1
6	00002169	Ground control panel harness	1
7	00002171	Pump motor positive harness	1
8	00002172	Pump motor negative harness	1
9	00002170	Motor controller harness	1
10	00002167	Battery positive harness(JCPT1412HD)	1
	00002664	Battery positive harness(JCPT1612HD, JCPT1614HD)	1
11	00002653	Battery negative harness(JCPT1412HD)	1
	00002165	Battery negative harness(JCPT1612HD, JCPT1614HD)	1
12	00002652	Battery harness 2	1
13	00002654	Battery harness 4	1
15	00002163	Battery harness 3	1
15	00002651	Battery harness 1	1
16		Controller (refer to 105.1)	1
17		Coil (refer to 401.1, 402.1)	2
18		Beacon (refer to 113.1)	1
19		Tilt sensor (refer to 113.1)	1
20		Limitl switch, pothole (refer to 103.1)	2
21		Limit switch, lift up/down (refer to 113.1)	2

505.1 Electrical Harness (JCPT1412HD, JCPT1612HD, JCPT1614HD)

Item	Part No.	Description	Qty.
22		Pressure sensor (refer to 401.1)	1
23		Angle sensor (refer to 205.1)	1
24		Platform control box assembly (refer to 306.1)	1
25		Function manifold (refer to 403.1)	1
26		Horn (refer to 105.1)	1
27		Hour meter (refer to 105.1)	1
28		Ground control assembly (refer to 113.1)	1
29		Alarm (refer to 105.1)	1
30		Motor (refer to 107.1)	1
31		Motor controller (refer to 105.1)	1
32		Fuse assembly (refer to 105.1)	1
33		Power switch (refer to 104.1)	1
34		Battery (refer to 104.1)	4
35		Charger (refer to 104.1)	1

506.1 Electrical Harness (JCPT1412DC, JCPT1612DC, JCPT1614DC)

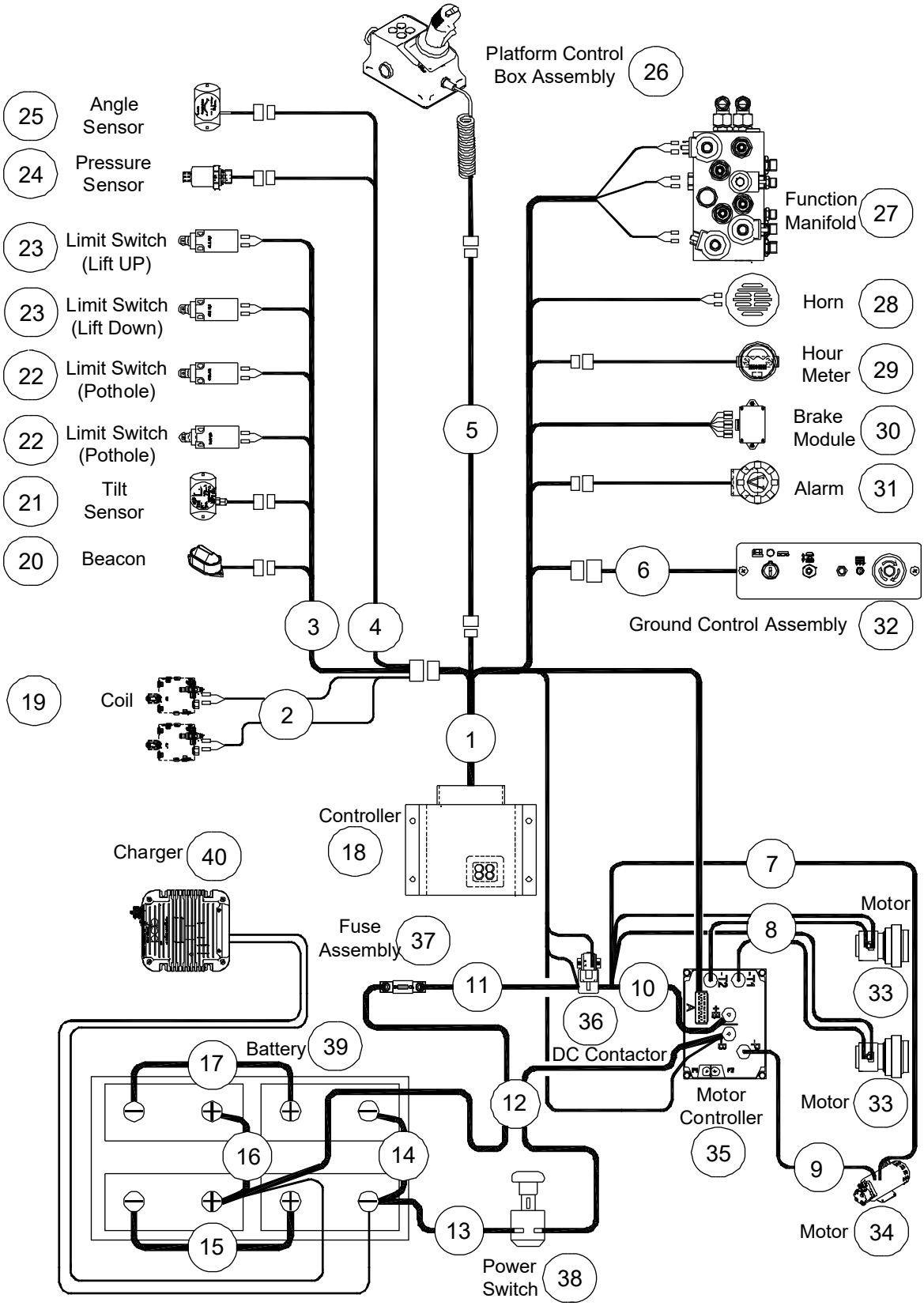

506.1 Electrical Harness (JCPT1412DC, JCPT1612DC, JCPT1614DC)

Item	Part No.	Description	Qty.
1	00002668	ECU harness	1
2	00003378	Lowering valve (JCPT1412DC)	1
	00003379	Lowering valve (JCPT1612DC, JCPT1614DC)	1
3	00002174	Limit switch harness (JCPT1412DC)	1
	00002693	Limit switch harness (JCPT1612DC, JCPT1614DC)	1
4	00002179	Angle & pressure sensors harness(JCPT1412DC)	1
	00002701	Angle & pressure sensors harness (JCPT1612DC, JCPT1614DC)	1
5	00002699	Platform control box harness (JCPT1412DC)	1
	00002700	Platform control box harness(JCPT1612DC,JCPT1614DC)	1
6	00002169	Ground control panel harness	1
7	00002679	Pump motor positive harness	1
8	00002690	Drive motor harness (JCPT1412DC)	1
	00002691	Drive motor harness (JCPT1612DC, JCPT1614DC)	1
9	00002683	Pump motor negative harness	1
10	00002674	Motor controller harness 1	1
11	00002706	DC contactor harness	1
12	00002662	Battery positive harness(JCPT1412DC)	1
	00002663	Battery positive harness(JCPT1612DC, JCPT1614DC)	1
13	00002653	Battery negative harness(JCPT1412DC)	1
	00002165	Battery negative harness(JCPT1612DC, JCPT1614DC)	1
14	00002652	Battery harness 2	1
15	00002654	Battery harness 4	1
16	00002163	Battery harness 3	1
17	00002651	Battery harness 1	1
18		Controller (refer to 105.1)	1
19		Coil (refer to 401.1, 402.1)	2
20		Beacon (refer to 113.1)	1

506.1 Electrical Harness (JCPT1412DC, JCPT1612DC, JCPT1614DC)

Item	Part No.	Description	Qty.
21		Tilt sensor (refer to 113.1)	1
22		Limitl switch, pothole (refer to 103.1)	2
23		Limit switch, lift up/down (refer to 113.1)	2
24		Pressure sensor (refer to 401.1)	1
25		Angle sensor (refer to 205.1)	1
26		Platform control box assembly (refer to 306.1)	1
27		Function manifold (refer to 403.1)	1
28		Horn (refer to 106.1)	1
29		Hour meter (refer to 106.1)	1
30		Brake module (refer to 108.1)	1
31		Alarm (refer to 106.1)	1
32		Ground control assembly (refer to 113.1)	1
33		Motor (refer to 102.1)	2
34		Motor (refer to 107.1)	1
35		Motor controller (refer to 108.1)	1
36		DC Contactor (refer to 108.1)	1
37		Fuse assembly (refer to 108.1)	1
38		Power switch (refer to 104.1)	1
39		Battery (refer to 104.1)	4
40		Charger (refer to 104.1)	1

507.1 Power to Platform

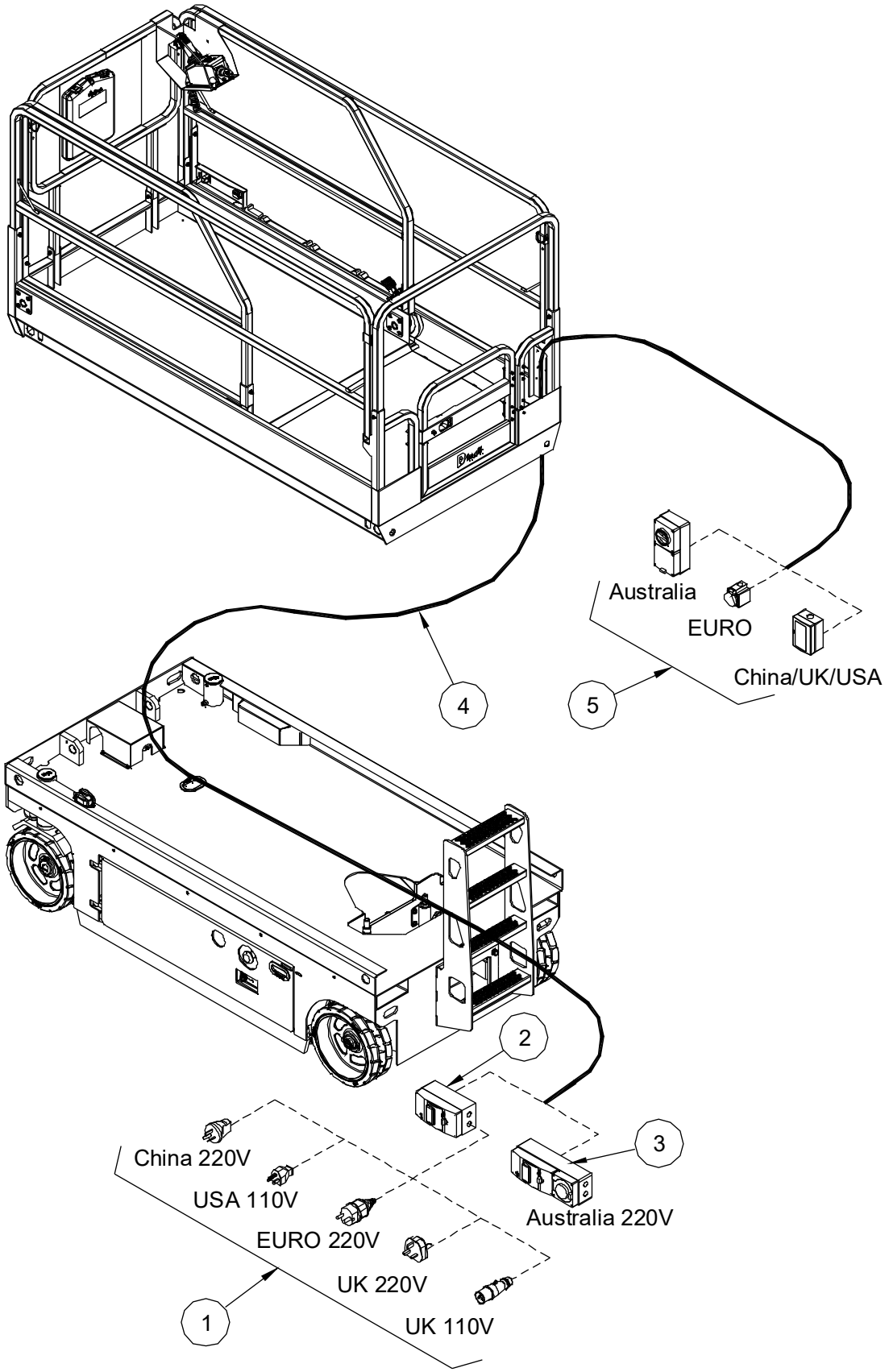

507.1 Power to Platform

Item	Part No.	Description	Qty.
1	00003148	AC plug (China 220V)	1
	00003149	AC plug (USA 110V)	1
	00003151	AC plug (European 220V)	1
	00003150	AC plug (UK 220V)	1
	00002615	AC plug (UK 110V)	1
2	00002634	Circuit breaker (Option)	1
3	00003147	AC plug (Australia 220V)	1
4	00003152	Wire cable, platform AC power (JCPT0808HD/DC)	1
	00003153	Wire cable, platform AC power (JCPT1008HD/DC)	1
	00003154	Wire cable, platform AC power (JCPT1012HD/DC)	1
	00003155	Wire cable, platform AC power (JCPT1212HD/DC)	1
	00003156	Wire cable, platform AC power (JCPT1412HD/DC)	1
	00003157	Wire cable, platform AC power (JCPT1612HD/DC, JCPT1614HD/DC)	1
5	00002617	AC socket (Australia)	1
	00002709	AC socket (European)	1
	00000668	AC socket (China/UK/USA)	1

Section 6
Decal

601.1 Decal (CE)

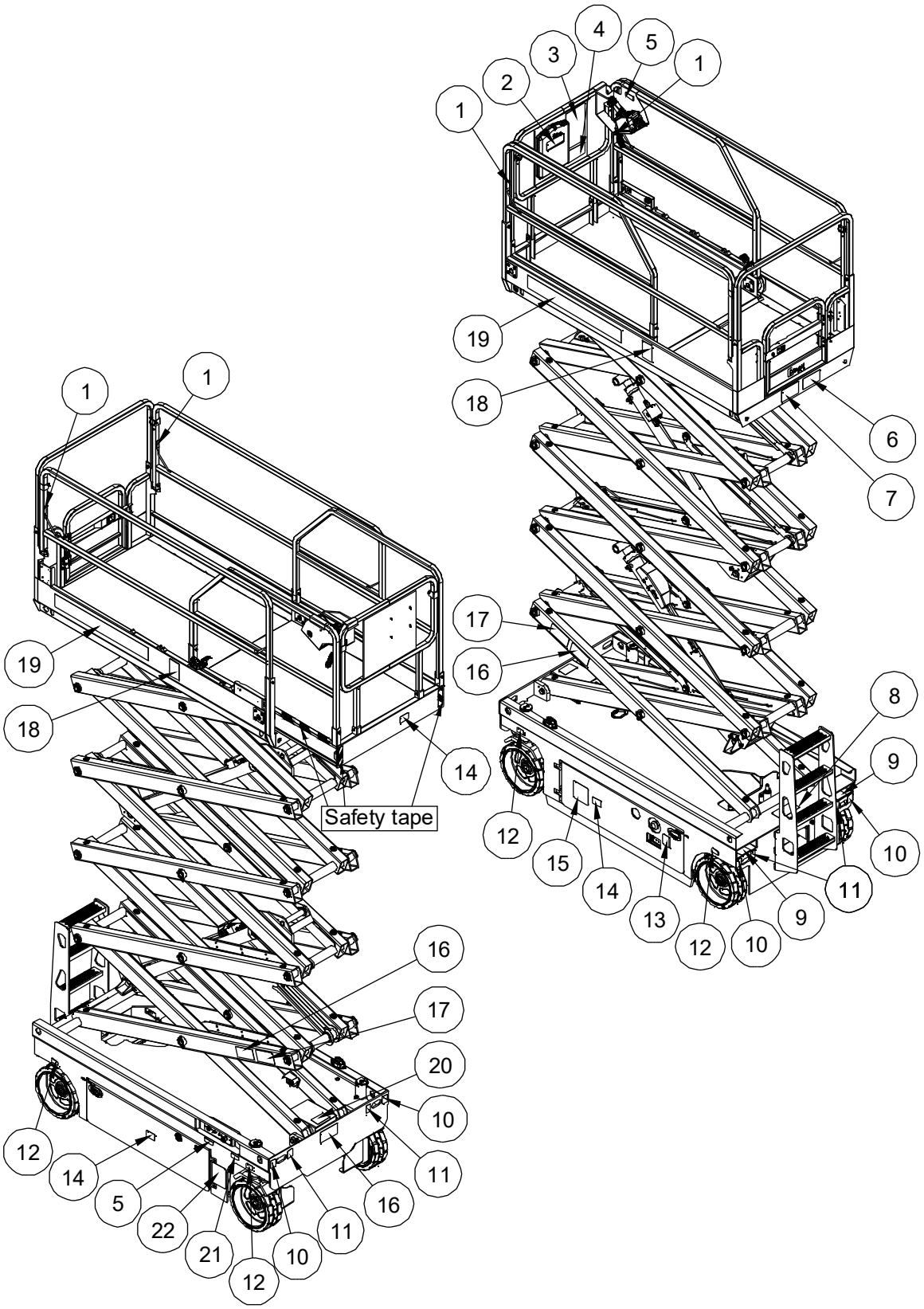

601.1 Decal (CE)

Item	Part No.	Description	Qty.
1	09440011	Decal, Label-Lanyard anchorage point	4
2	09340001	Decal, Notice-Keep the manual with the machine	1
3	09440001	Decal, Danger-General safety rules	1
4	09440003	Decal, Danger-Tip-over hazard, tilt-alarm	1
5	09340003	Decal, Instructions-Refer the operator to the instructions for use	2
6	09440013	Decal, Label-Capacity 380kg (JCPT0808HD/DC)	1
	09440014	Decal, Label-Capacity 230kg (JCPT1008HD/DC)	1
	09440015	Decal, Label-Capacity 450kg (JCPT1012HD/DC)	1
	09440016	Decal, Label-Capacity 320kg (JCPT1212HD/DC)	1
	09440017	Decal, Label-Capacity 320kg (JCPT1412HD/DC)	1
	09440018	Decal, Label-Capacity 200kg (JCPT1612HD/DC)	1
7	09440005	Decal, Warning-Use indoors only (JCPT1008HD/DC, JCPT1412HD/DC, JCPT1612HD/DC)	1
8	09210001	Nameplate, Manufacturer serial number	1
9	09310001	Decal, Instructions-Forklift pockets	2
10	09310003	Decal, Instructions-Tie down point	4
11	09310002	Decal, Instructions-Lift point	4
12	09310008	Decal, Instructions-Maximum wheel load: 1000kg (JCPT0808HD/DC)	4
	09310010	Decal, Instructions-Maximum wheel load: 960kg (JCPT1008HD/DC)	4
	09310012	Decal, Instructions-Maximum wheel load: 1240kg (JCPT1012HD/DC)	4
	09310014	Decal, Instructions-Maximum wheel load: 1310kg (JCPT1212HD/DC)	4
	09310016	Decal, Instructions-Maximum wheel load: 1280kg (JCPT1412HD/DC)	4
	09310018	Decal, Instructions-Maximum wheel load: 1350kg (JCPT1612HD/DC)	4
13	09310006	Decal, Notice-Main power switch operation	1
14	09540001	Decal, Label-CE	3
15	09410001	Decal, Danger-Explosion/burn hazard	1

601.1 Decal (CE)

Item	Part No.	Description	Qty.
16	09430003	Decal, Danger-Keep away from moving parts (JCPT0808HD/DC, JCPT1008HD/DC, JCPT1012HD/DC, JCPT1212HD/DC)	3
	09430003	Decal, Danger-Keep away from moving parts (JCPT1412HD/DC, JCPT1612HD/DC)	5
17	09430001	Decal, Danger-Safety arm (JCPT0808HD/DC, JCPT1008HD/DC, JCPT1012HD/DC, JCPT1212HD/DC)	2
	09430001	Decal, Danger-Safety arm (JCPT1412HD/DC, JCPT1612HD/DC)	4
18	09440009	Decal, Caution-Max. manual force 400N (Indoor)200N (Outdoor)(JCPT0808HD/DC, JCPT1212HD/DC)	2
	09440007	Decal, Caution-Max. manual force 400N (JCPT1008HD/DC, JCPT1012HD/DC,JCPT1412HD/DC, JCPT1612HD/DC)	2
19	09640001	Decal, Cosmetic-JCPT0808 (JCPT0808HD/DC)	2
	09640002	Decal, Cosmetic-JCPT1008 (JCPT1008HD/DC)	2
	09640003	Decal, Cosmetic-JCPT1012 (JCPT1012HD/DC)	2
	09640004	Decal, Cosmetic-JCPT1212 (JCPT1212HD/DC)	2
	09640005	Decal, Cosmetic-JCPT1412 (JCPT1412HD/DC)	2
	09640006	Decal, Cosmetic-JCPT1612 (JCPT1612HD/DC)	2
20	09410005	Decal, Danger-Do not alter or disable limit switch	1
21	09310004	Decal, Instructions-Emergency lower	1
22	09410003	Decal, Warning-Inspected and operation properly	1

601.1 Decal (CE)

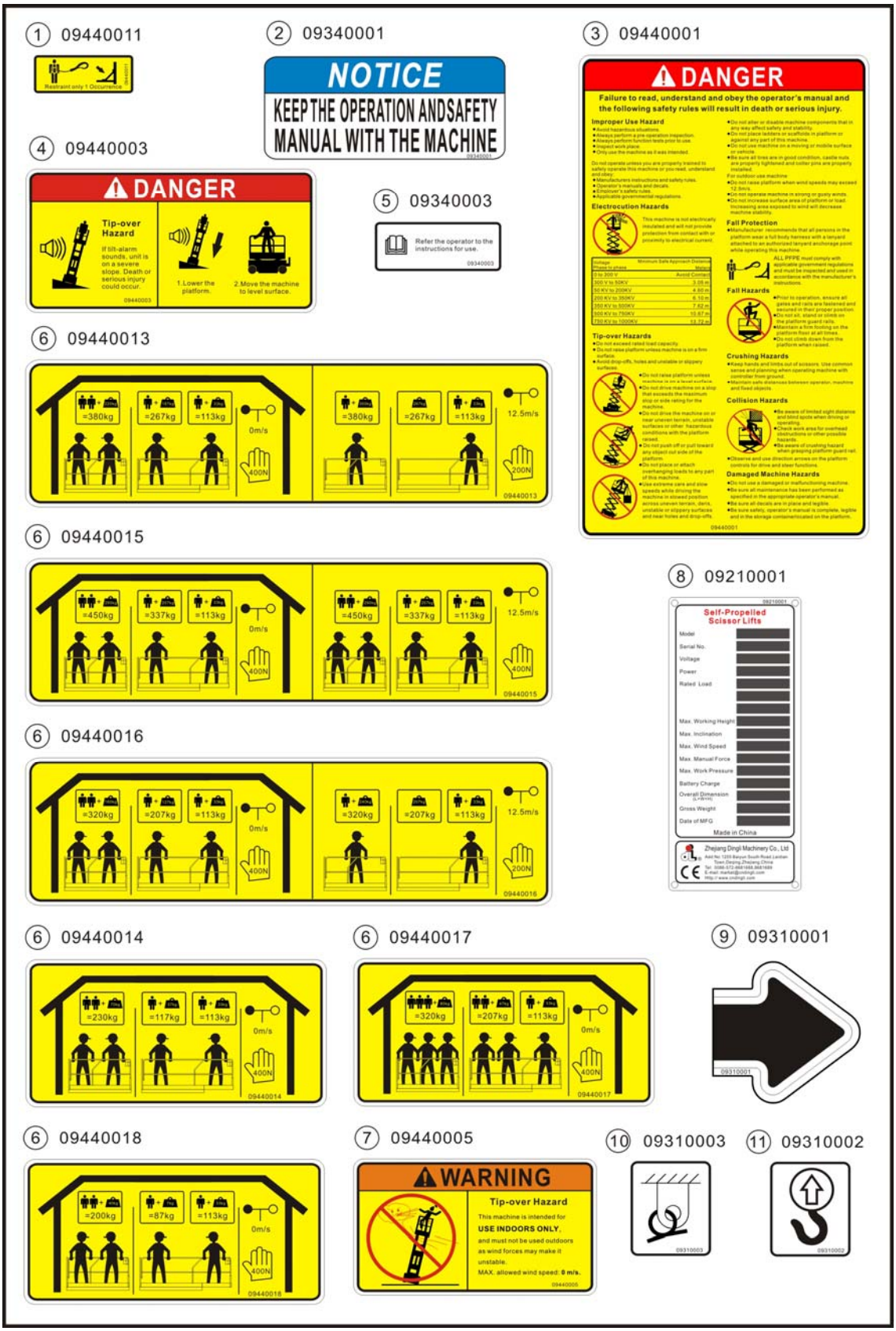

601.1 Decal (CE)

602.1 Decal (ANSI)

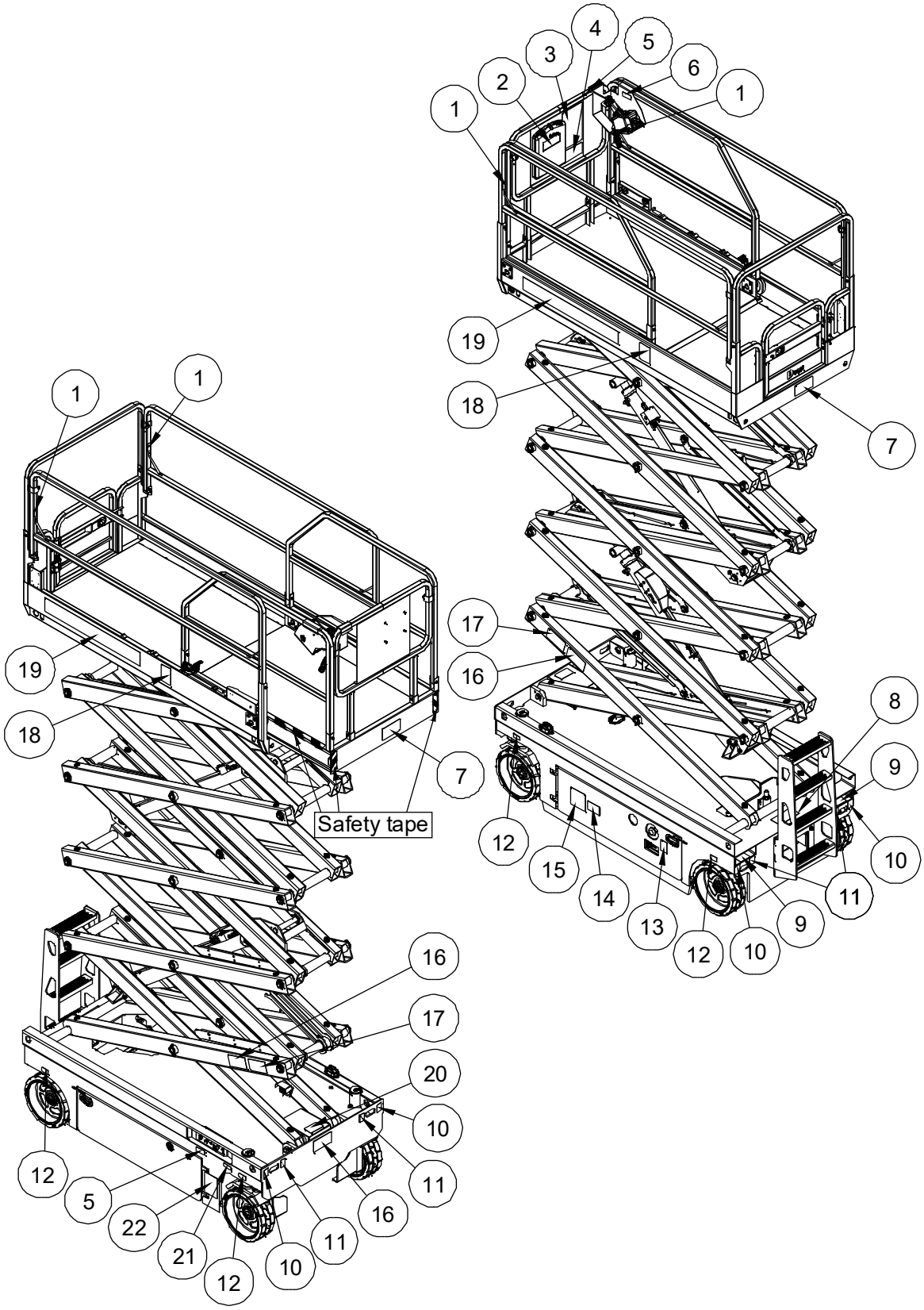

602.1 Decal (ANSI)

Item	Part No.	Description	Qty.
1	09440011	Decal, Label-Lanyard anchorage point	4
2	09340001	Decal, Notice-Keep the manual with the machine	1
3	09440037	Decal, Danger-General safety rules	1
4	09440003	Decal, Danger-Tip-over hazard, tilt-alarm	1
5	09340005	Decal, Instructions-Platform controller normal position	1
6	09340003	Decal, Instructions-Refer the operator to the instructions for use	2
7	09440027	Decal, Label-Capacity 840 lbs (JCPT0808HD/DC)	2
	09440029	Decal, Label-Capacity 500 lbs (JCPT1008HD/DC, JCPT1614HD/DC)	2
	09440031	Decal, Label-Capacity 1000 lbs (JCPT1012HD/DC)	2
	09440033	Decal, Label-Capacity 700 lbs (JCPT1212HD/DC)	2
	09440035	Decal, Label-Capacity 550 lbs (JCPT1412HD/DC)	2
8	09210003	Nameplate, Manufacturer serial number	1
9	09310001	Decal, Instructions-Forklift pockets	2
10	09310003	Decal, Instructions-Tie down point	4
11	09310002	Decal, Instructions-Lift point	4
12	09310020	Decal, Instructions-Maximum wheel load 2112 lbs (JCPT0808HD/DC, JCPT1008HD/DC)	4
	09310021	Decal, Instructions-Maximum wheel load 2376 lbs (JCPT1012HD/DC)	4
	09310023	Decal, Instructions-Maximum wheel load 2508 lbs (JCPT1212HD/DC)	4
	09310025	Decal, Instructions-Maximum wheel load 2948 lbs (JCPT1412HD/DC)	4
	09310026	Decal, Instructions-Maximum wheel load 3124 lbs (JCPT1614HD/DC)	4
13	09310006	Decal, Notice-Main power switch operation	1
14	09410007	Decal, Warning-Change battery (JCPT0808HD/DC, JCPT1008HD/DC, JCPT1012HD/DC)	1
	09410009	Decal, Warning-Change battery (JCPT1212HD/DC)	1
	09410011	Decal, Warning-Change battery (JCPT1412HD/DC, JCPT1614HD/DC)	1
15	09410001	Decal, Danger-Explosion/burn hazard	1

602.1 Decal (ANSI)

Item	Part No.	Description	Qty.
16	09430003	Decal, Danger-Keep away from moving parts (JCPT0808HD/DC, JCPT1008HD/DC, JCPT1012HD/DC, JCPT1212HD/DC)	3
	09430003	Decal, Danger-Keep away from moving parts (JCPT1412HD/DC, JCPT1612HD/DC)	5
17	09430001	Decal, Danger-Safety arm (JCPT0808HD/DC, JCPT1008HD/DC, JCPT1012HD/DC, JCPT1212HD/DC)	2
	09430001	Decal, Danger-Safety arm (JCPT1412HD/DC, JCPT1612HD/DC)	4
18	09440021	Decal, Caution-Max. manual force 126 lbs (JCPT0808HD/DC)	2
	09440019	Decal, Caution-Max. manual force 100 lbs (JCPT1008HD/DC, JCPT1412HD/DC, JCPT1614HD/DC)	2
	09440023	Decal, Caution-Max. manual force 150 lbs (JCPT1012HD/DC)	2
	09440025	Decal, Caution-Max. manual force 105lbs (JCPT1212HD/DC)	2
19	09640001	Decal, Cosmetic-JCPT0808 (JCPT0808HD/DC)	2
	09640002	Decal, Cosmetic-JCPT1008 (JCPT1008HD/DC)	2
	09640003	Decal, Cosmetic-JCPT1012 (JCPT1012HD/DC)	2
	09640004	Decal, Cosmetic-JCPT1212 (JCPT1212HD/DC)	2
	09640005	Decal, Cosmetic-JCPT1412 (JCPT1412HD/DC)	2
	09640007	Decal, Cosmetic-JCPT1614 (JCPT1614HD/DC)	2
20	09410005	Decal, Danger-Do not alter or disable limit switch	1
21	09310004	Decal, Instructions-Emergency lower	1
22	09410013	Decal, Warning-Inspected and operation properly	1

602.1 Decal (ANSI)

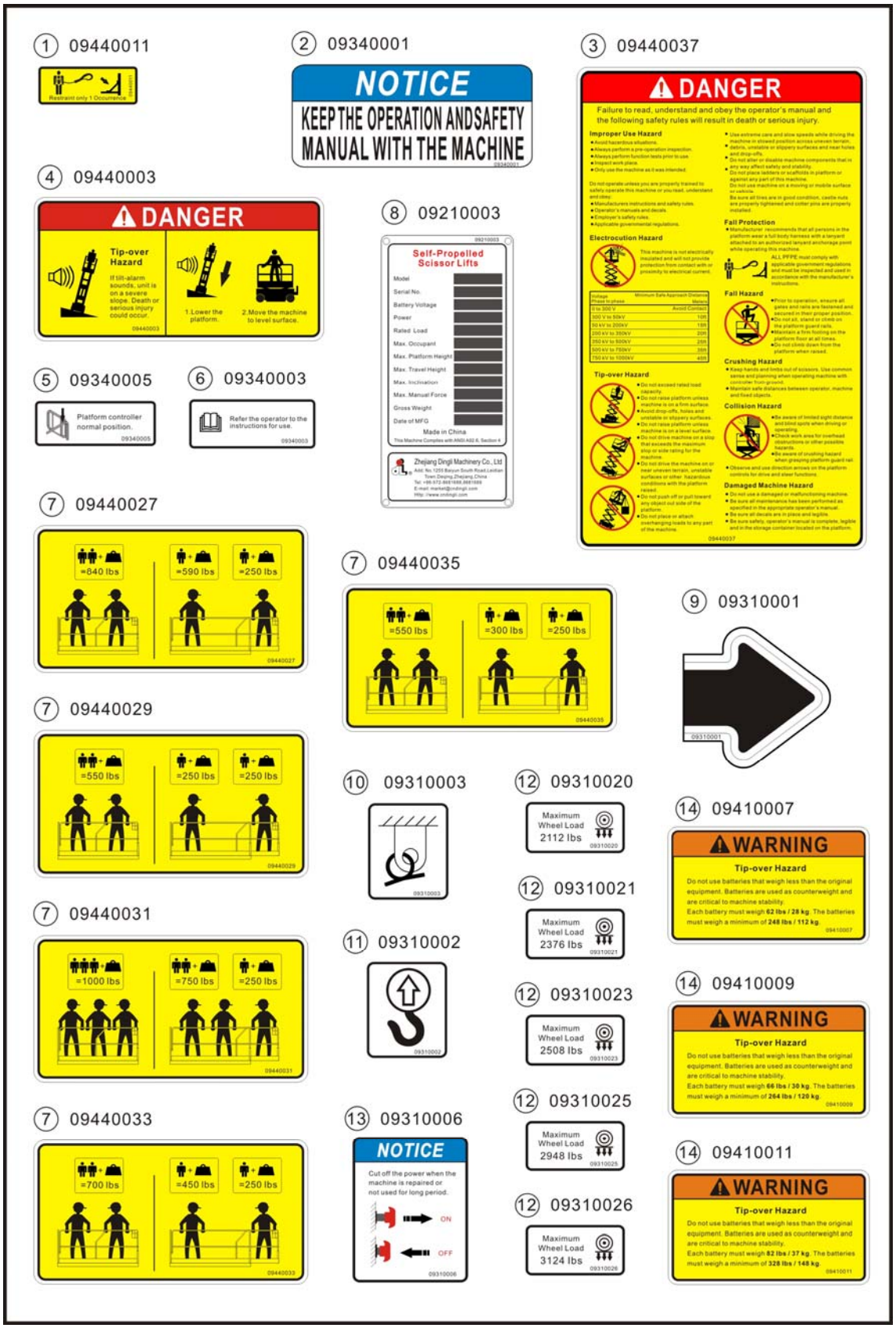
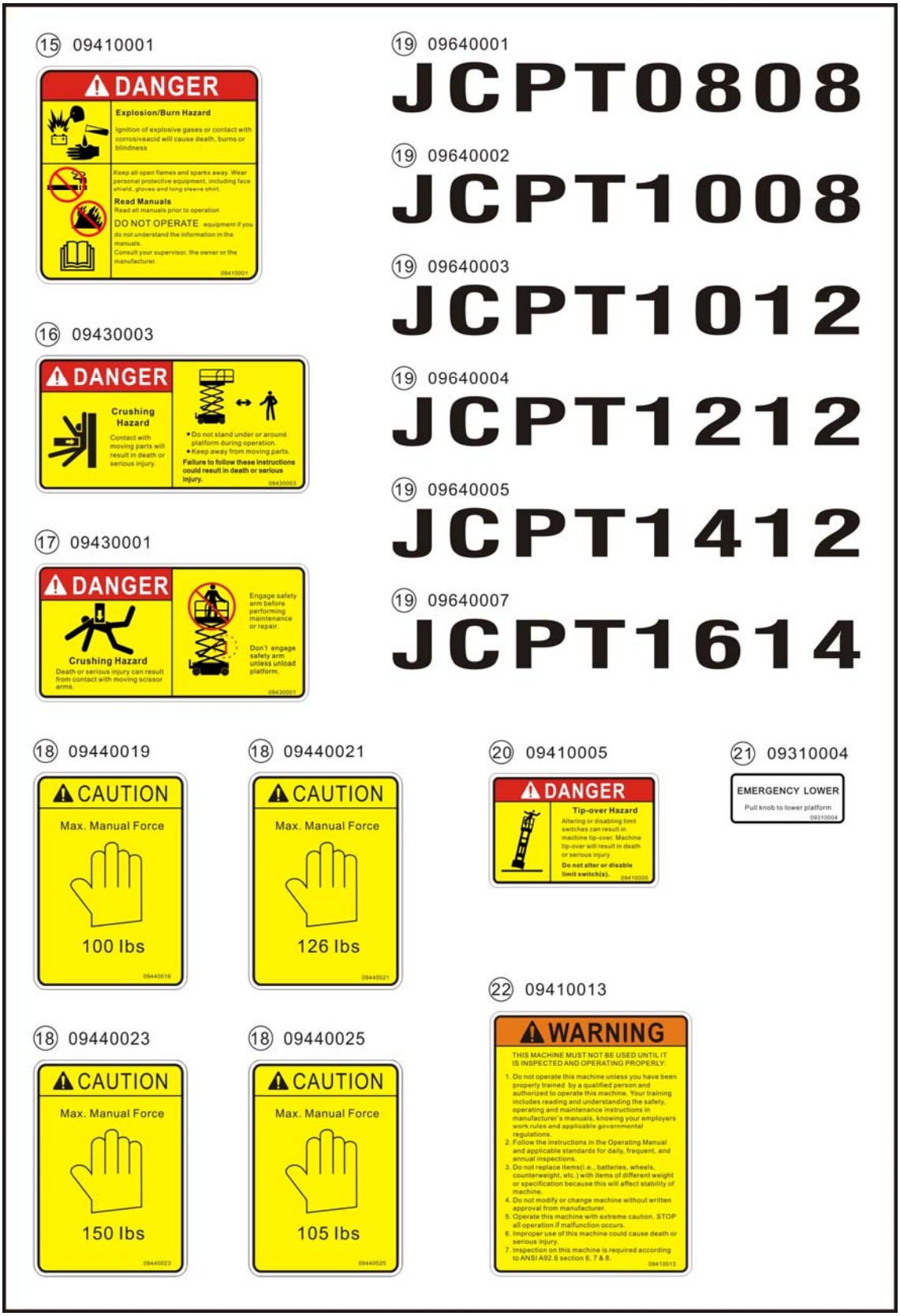
602.1 Decal (ANSI)